Pipe system and point of use Technical data sheets

FAST | EASY | RELIABLE

Socket system 15-28 mm

Laid, extended and modified in an instant

For small and medium-sized workshops: Lay pipelines quickly and easily with a few hand movements with the AIRnet pipe system and extend or modify existing pipelines – the flexible plug-in system offers a wide selection of different connectors.

PA Pipe D15 25m

- **Polyamide (PA) for greater flexibility**
- **Pipe shears cut pipelines to length in a single cut**

- Free of silicone

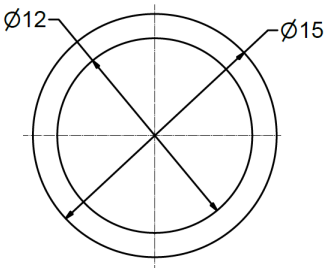

Specifications	
Outer diameter	15 mm
Inner diameter	12 mm
Max. Pressure	14 bar -20°C – 20°C / 11bar +20°C – 50°C
Packeging unit	1 pcs.

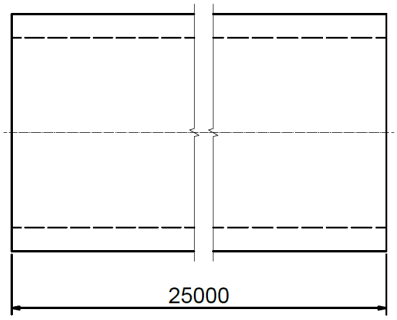

Ordering Information

Ordering Information	Weight KG	Dimension mm
2813 1100 00	1,635	25000x15x15

PA Pipe D18 25m

- **Polyamide (PA) for greater flexibility**
- **Pipe shears cut pipelines to length in a single cut**

- Free of silicone

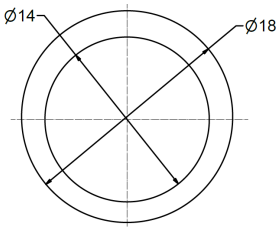

Specifications	
Outer diameter	18 mm
Inner diameter	14 mm
Max. Pressure	14 bar -20°C – 20°C / 11bar +20°C – 50°C
Packeging unit	1 pcs.

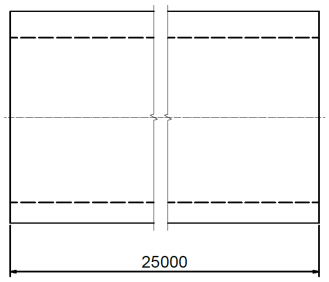

Ordering Information

Ordering Information	Weight KG	Dimension mm
2813 2100 00	2,540	25000x18x18

PA Pipe D22 25m

- **Polyamide (PA) for greater flexibility**
- **Pipe shears cut pipelines to length in a single cut**

- Free of silicone

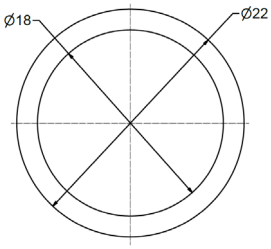

Specifications	
Outer diameter	22 mm
Inner diameter	18 mm
Max. Pressure	14 bar -20°C – 20°C / 11bar +20°C – 50°C
Packeging unit	1 pcs.

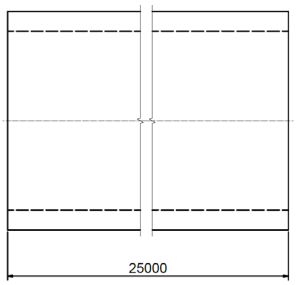

Ordering Information

Ordering Information	Weight KG	Dimension mm
2813 3100 00	3,233	25000x22x22

PA Pipe D28 25m

- **Polyamide (PA) for greater flexibility**
- **Pipe shears cut pipelines to length in a single cut**

- Free of silicone

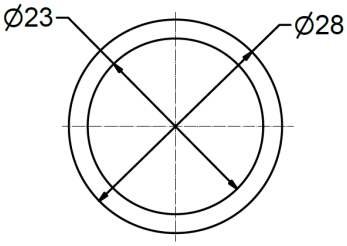

Specifications	
Outer diameter	28 mm
Inner diameter	23 mm
Max. Pressure	14 bar -20°C – 20°C / 11bar +20°C – 50°C
Packeging unit	1 pcs.

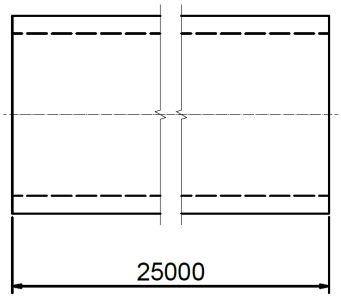

Ordering Information

Ordering Information	Weight KG	Dimension mm
2813 4100 00	4,940	25000x28x28

PA Pipe D15 5,7m

- **Polyamide (PA) for greater flexibility**
- **Pipe shears cut pipelines to length in a single cut**

- Free of silicone

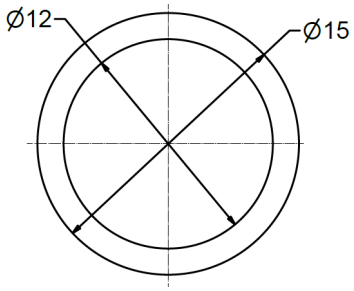

Specifications	
Outer diameter	15 mm
Inner diameter	12 mm
Max. Pressure	16 bar -20°C – 20°C / 11bar +20°C – 50°C
Packeging unit	2 pcs.

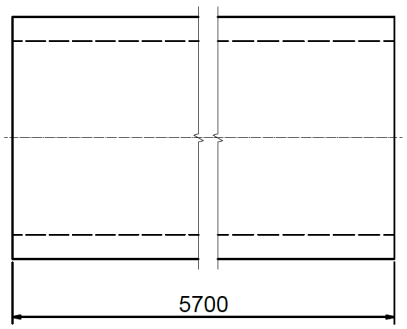

Ordering Information

Ordering Information	Weight KG	Dimension mm
2813 1000 00	0,540	5700x15x15

PA Pipe D15 10m

- **Polyamide (PA) for greater flexibility**
- **Pipe shears cut pipelines to length in a single cut**

- Free of silicone

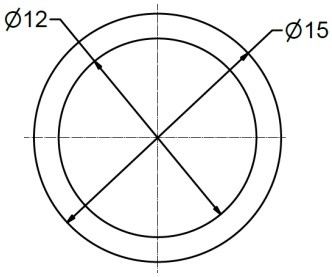

Specifications	
Outer diameter	15 mm
Inner diameter	12 mm
Max. Pressure	14 bar -20°C – 20°C / 11bar +20°C – 50°C
Packeging unit	1 pcs.

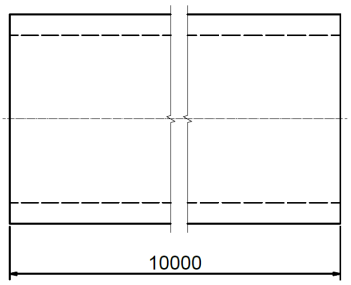

Ordering Information

Ordering Information	Weight KG	Dimension mm
2813 1200 00	0,658	10000x15x15

PA Pipe D18 5,7m

- **Polyamide (PA) for greater flexibility**
- **Pipe shears cut pipelines to length in a single cut**

- Free of silicone

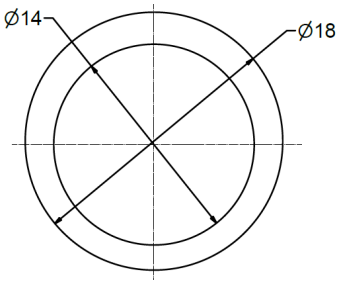

Specifications	
Outer diameter	18 mm
Inner diameter	14 mm
Max. Pressure	16 bar -20°C – 20°C / 11bar +20°C – 50°C
Packeging unit	1 pcs.

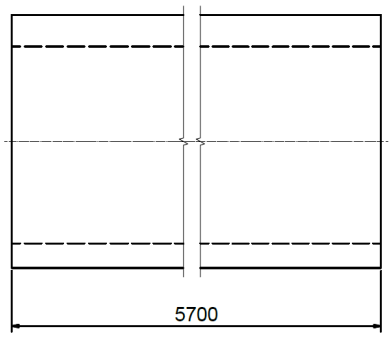

Ordering Information

Ordering Information	Weight KG	Dimension mm
2813 2000 00	0,58	5700x18x18

PA Pipe D18 10m

- **Polyamide (PA) for greater flexibility**
- **Pipe shears cut pipelines to length in a single cut**

- Free of silicone

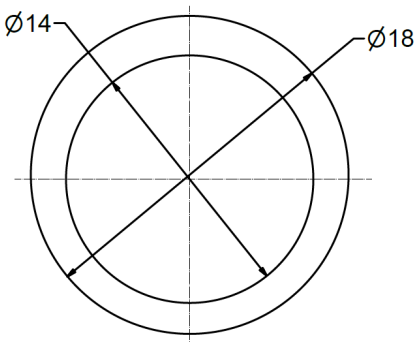

Specifications	
Outer diameter	18 mm
Inner diameter	14 mm
Max. Pressure	14 bar -20°C – 20°C / 11bar +20°C – 50°C
Packeging unit	1 pcs.

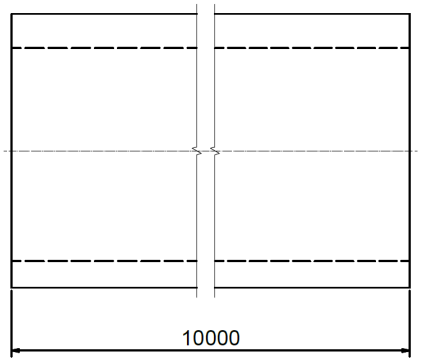

Ordering Information

Ordering Information	Weight KG	Dimension mm
2813 2200 00	1,016	10000x18x18

PA Pipe D22 5,7m

- **Polyamide (PA) for greater flexibility**
- **Pipe shears cut pipelines to length in a single cut**

- Free of silicone

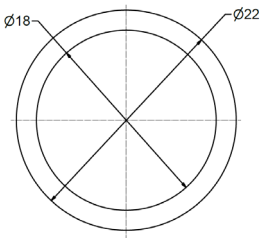

Specifications	
Outer diameter	22 mm
Inner diameter	18 mm
Max. Pressure	16 bar -20°C – 20°C / 11bar +20°C – 50°C
Packeging unit	1 pcs.

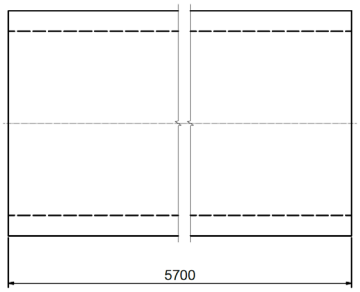

Ordering Information

Ordering Information	Weight KG	Dimension mm
2813 3000 00	0,734	5700x22x22

PA Pipe D28 5,7m

- **Polyamide (PA) for greater flexibility**
- **Pipe shears cut pipelines to length in a single cut**

- Free of silicone

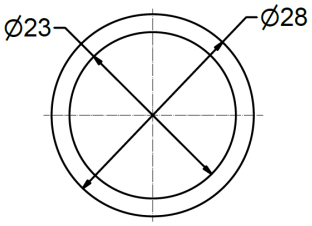

Specifications	
Outer diameter	28 mm
Inner diameter	23 mm
Max. Pressure	16 bar -20°C – 20°C / 11bar +20°C – 50°C
Packeging unit	1 pcs.

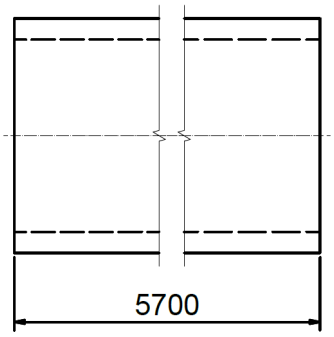

Ordering Information

Ordering Information	Weight KG	Dimension mm
2813 4000 00	1,127	5700x22x22

PA UV Pipe D15 25m

- **Polyamide (PA) for greater flexibility**
- **Pipe shears cut pipelines to length in a single cut**

- Free of silicone
- Black UV-resistant pipes, suitable for outdoor installation

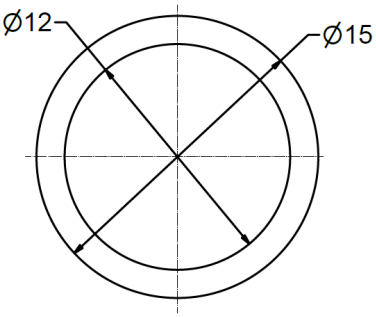

Specifications	
Outer diameter	15 mm
Inner diameter	12 mm
Max. Pressure	14 bar -20°C – 20°C / 11bar +20°C – 50°C
Packeging unit	1 pcs.

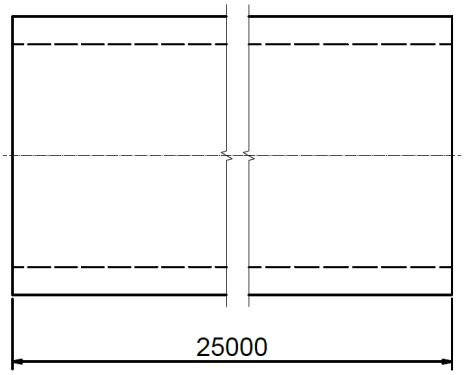

Ordering Information

Ordering Information	Weight KG	Dimension mm
2813 1300 00	1,595	25000x15x15

PA UV Pipe D18 25m

- **Polyamide (PA) for greater flexibility**
- **Pipe shears cut pipelines to length in a single cut**

- Free of silicone
- Black UV-resistant pipes, suitable for outdoor installation

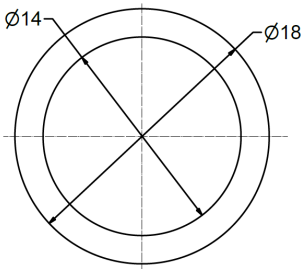

Specifications	
Outer diameter	18 mm
Inner diameter	14 mm
Max. Pressure	14 bar -20°C – 20°C / 11bar +20°C – 50°C
Packeging unit	1 pcs.

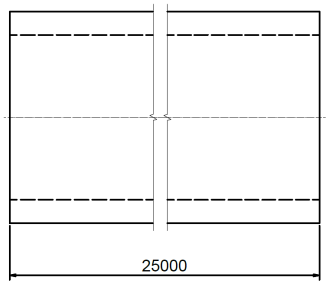

Ordering Information

Ordering Information	Weight KG	Dimension mm
2813 2300 00	2,560	25000x18x18

PA UV Pipe D22 25m

- **Polyamide (PA) for greater flexibility**
- **Pipe shears cut pipelines to length in a single cut**

- Free of silicone
- Black UV-resistant pipes, suitable for outdoor installation

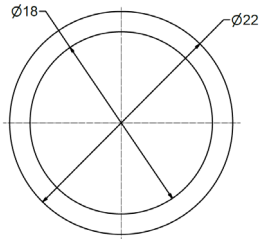

Specifications

Outer diameter	22 mm
Inner diameter	18 mm
Max. Pressure	14 bar -20°C – 20°C / 11bar +20°C – 50°C
Packeging unit	1 pcs.

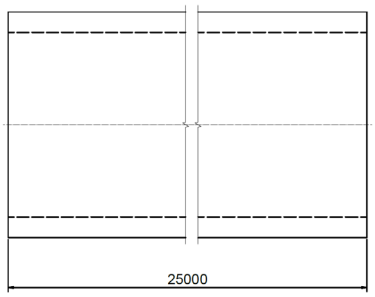

Ordering Information

Ordering Information	Weight KG	Dimension mm
2813 3300 00	3,190	25000x22x22

PA UV Pipe D22 5,7m

- **Polyamide (PA) for greater flexibility**
- **Pipe shears cut pipelines to length in a single cut**

- Free of silicone
- Black UV-resistant pipes, suitable for outdoor installation

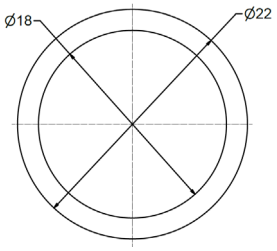

Specifications	
Outer diameter	22 mm
Inner diameter	18 mm
Max. Pressure	16 bar -20°C – 20°C / 11bar +20°C – 50°C
Packeging unit	1 pcs.

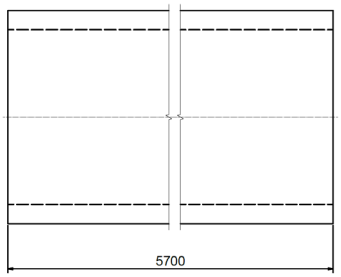

Ordering Information

Ordering Information	Weight KG	Dimension mm
2813 3200 00	0,708	5700x22x22

AL Pipe D15 5,7m

- **Ideal as a main pipe as lightweight, stable and easy to lay using few pipe clips**
- **Low linear expansion ideal for large fluctuations in temperature**
- **Pipe protected by outer coating**

- UV-resistant and suitable for outdoor installation
- Free of silicone

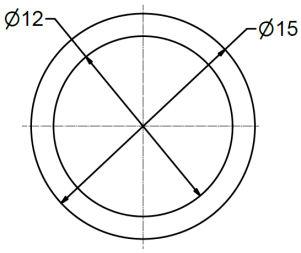

Specifications	
Outer diameter	15 mm
Inner diameter	12 mm
Max. Pressure	16 bar -20°C – 20°C / 16bar +20°C – 50°C
Packeging unit	2 pcs.

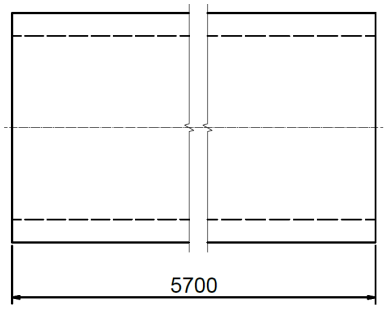

Ordering Information

Ordering Information	Weight KG	Dimension mm
2813 1400 00	0,988	5700x15x15

AL Pipe D18 5,7m

- **Ideal as a main pipe as lightweight, stable and easy to lay using few pipe clips**
- **Low linear expansion ideal for large fluctuations in temperature**
- **Pipe protected by outer coating**

- UV-resistant and suitable for outdoor installation
- Free of silicone

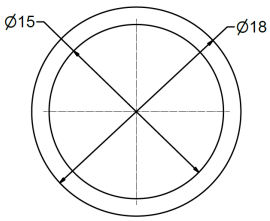

Specifications	
Outer diameter	18 mm
Inner diameter	15 mm
Max. Pressure	16 bar -20°C – 20°C / 16bar +20°C – 50°C
Packeging unit	1 pcs.

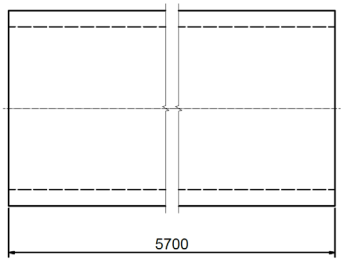

Ordering Information

Ordering Information	Weight KG	Dimension mm
2813 2400 00	1,218	5700x18x18

AL Pipe D22 5,7m

- **Ideal as a main pipe as lightweight, stable and easy to lay using few pipe clips**
- **Low linear expansion ideal for large fluctuations in temperature**
- **Pipe protected by outer coating**

- UV-resistant and suitable for outdoor installation
- Free of silicone

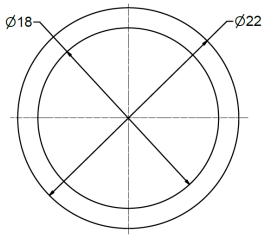

Specifications	
Outer diameter	22 mm
Inner diameter	18 mm
Max. Pressure	16 bar -20°C – 20°C / 16bar +20°C – 50°C
Packeging unit	1 pcs.

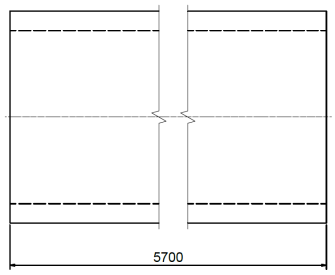

Ordering Information

Ordering Information	Weight KG	Dimension mm
2813 3400 00	1,963	5700x22x22

AL Pipe D28 5,7m

- **Ideal as a main pipe as lightweight, stable and easy to lay using few pipe clips**
- **Low linear expansion ideal for large fluctuations in temperature**
- **Pipe protected by outer coating**

- UV-resistant and suitable for outdoor installation
- Free of silicone

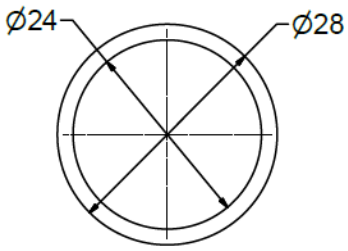

Specifications	
Outer diameter	28 mm
Inner diameter	24 mm
Max. Pressure	16 bar -20°C – 20°C / 16bar +20°C – 50°C
Packeging unit	1 pcs.

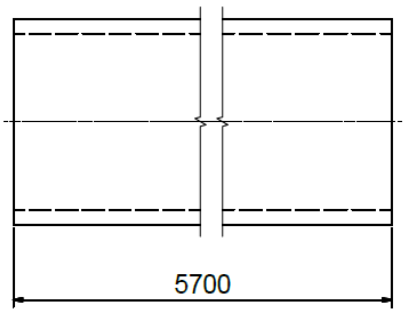

Ordering Information

Ordering Information	Weight KG	Dimension mm
2813 4400 00	2,417	5700x28x28

Nipple socket D15 1/2 ISO7R m

- **Simple, quick assembly for huge time savings**
- **Flexible system for simple release and reconnection**
- **Resistant O-ring made from NBR ensures complete impermeability, even if the air contains oil**
- **Large number of stainless steel retaining claws hold the pipe securely in the plug Connectors**

- **2813101780 Nipple socket D15 1/2 ISO7R m**
- **2813201780 Nipple socket D18 1/2 ISO7R m**
- **2813211780 Nipple socket D18 3/4 ISO7R m**
- **2813301780 Nipple socket D22 1/2 ISO7R m**
- **2813311780 Nipple socket D22 3/4 ISO7R m**
- **2813421780 Nipple socket D28 1 ISO7R m**

- Working pressure range : 16 bar at -20 °C to ≤ +50 °C
- Material: Brass
- Free of Silicone

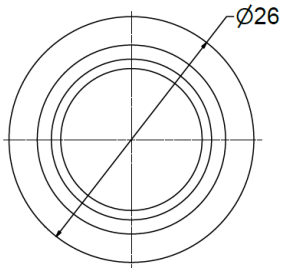

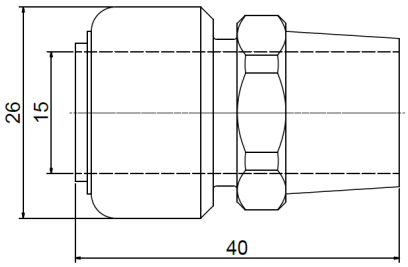

Ordering Information

Ordering Information	Weight KG	Dimension mm
2813101780	0,052	40x26x26
2813201780	0,052	39x29x29
2813211780	0,076	42x35x35
2813301780	0,070	41x34x34
2813311780	0,075	43x34x34
2813421780	0,114	48x42x42

Nipple socket D18 3/4 ISO7R m

- **Simple, quick assembly for huge time savings**
- **Flexible system for simple release and reconnection**
- **Resistant O-ring made from NBR ensures complete impermeability, even if the air contains oil**
- **Large number of stainless steel retaining claws hold the pipe securely in the plug Connectors**

- **2813101780 Nipple socket D15 1/2 ISO7R m**
- **2813201780 Nipple socket D18 1/2 ISO7R m**
- **2813211780 Nipple socket D18 3/4 ISO7R m**
- **2813301780 Nipple socket D22 1/2 ISO7R m**
- **2813311780 Nipple socket D22 3/4 ISO7R m**
- **2813421780 Nipple socket D28 1 ISO7R m**

- Working pressure range : 16 bar at -20 °C to ≤ +50 °C
- Material: Brass
- Free of Silicone

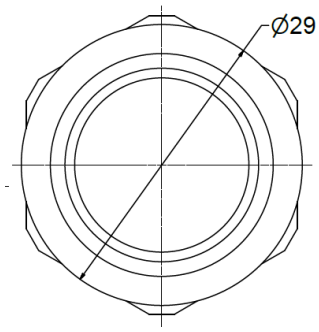

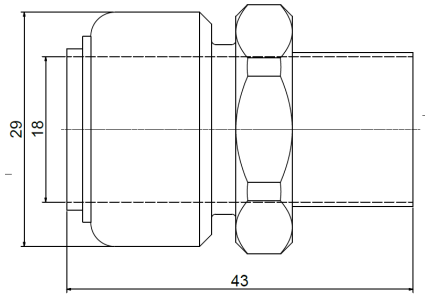

Ordering Information

Ordering Information	Weight KG	Dimension mm
2813101780	0,052	40x26x26
2813201780	0,052	39x29x29
2813211780	0,076	42x35x35
2813301780	0,070	41x34x34
2813311780	0,075	43x34x34
2813421780	0,114	48x42x42

Nipple socket D18 1/2 ISO7R m

- **Simple, quick assembly for huge time savings**
- **Flexible system for simple release and reconnection**
- **Resistant O-ring made from NBR ensures complete impermeability, even if the air contains oil**
- **Large number of stainless steel retaining claws hold the pipe securely in the plug Connectors**

- **2813101780 Nipple socket D15 1/2 ISO7R m**
- **2813201780 Nipple socket D18 1/2 ISO7R m**
- **2813211780 Nipple socket D18 3/4 ISO7R m**
- **2813301780 Nipple socket D22 1/2 ISO7R m**
- **2813311780 Nipple socket D22 3/4 ISO7R m**
- **2813421780 Nipple socket D28 1 ISO7R m**

- Working pressure range : 16 bar at -20 °C to ≤ +50 °C
- Material: Brass
- Free of Silicone

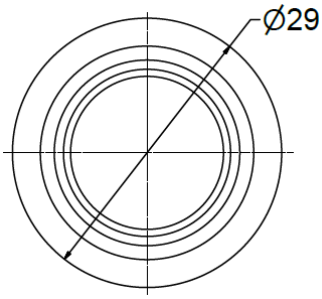

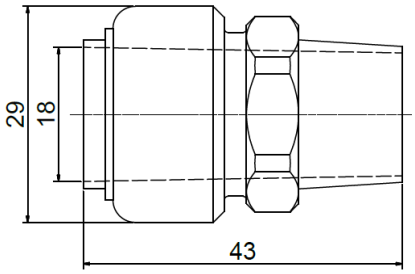

Ordering Information

Ordering Information	Weight KG	Dimension mm
2813101780	0,052	40x26x26
2813201780	0,052	39x29x29
2813211780	0,076	42x35x35
2813301780	0,070	41x34x34
2813311780	0,075	43x34x34
2813421780	0,114	48x42x42

Nipple socket D22 3/4 ISO7R m

- **Simple, quick assembly for huge time savings**
- **Flexible system for simple release and reconnection**
- **Resistant O-ring made from NBR ensures complete impermeability, even if the air contains oil**
- **Large number of stainless steel retaining claws hold the pipe securely in the plug Connectors**

- **2813101780 Nipple socket D15 1/2 ISO7R m**
- **2813201780 Nipple socket D18 1/2 ISO7R m**
- **2813211780 Nipple socket D18 3/4 ISO7R m**
- **2813301780 Nipple socket D22 1/2 ISO7R m**
- **2813311780 Nipple socket D22 3/4 ISO7R m**
- **2813421780 Nipple socket D28 1 ISO7R m**

- Working pressure range : 16 bar at -20 °C to ≤ +50 °C
- Material: Brass
- Free of Silicone

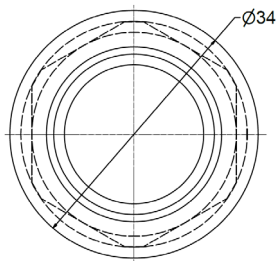

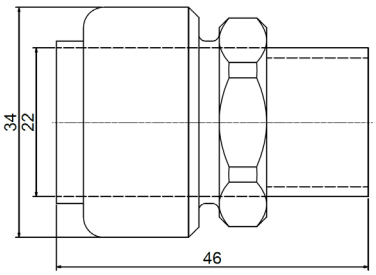

Ordering Information

Ordering Information	Weight KG	Dimension mm
2813101780	0,052	40x26x26
2813201780	0,052	39x29x29
2813211780	0,076	42x35x35
2813301780	0,070	41x34x34
2813311780	0,075	43x34x34
2813421780	0,114	48x42x42

Nipple socket D22 1/2 ISO7R m

- **Simple, quick assembly for huge time savings**
- **Flexible system for simple release and reconnection**
- **Resistant O-ring made from NBR ensures complete impermeability, even if the air contains oil**
- **Large number of stainless steel retaining claws hold the pipe securely in the plug Connectors**

- **2813101780 Nipple socket D15 1/2 ISO7R m**
- **2813201780 Nipple socket D18 1/2 ISO7R m**
- **2813211780 Nipple socket D18 3/4 ISO7R m**
- **2813301780 Nipple socket D22 1/2 ISO7R m**
- **2813311780 Nipple socket D22 3/4 ISO7R m**
- **2813421780 Nipple socket D28 1 ISO7R m**

- Working pressure range : 16 bar at -20 °C to ≤ +50 °C
- Material: Brass
- Free of Silicone

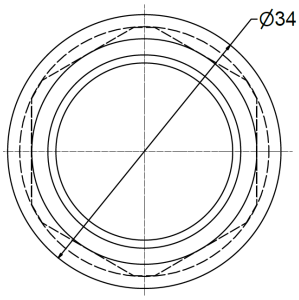

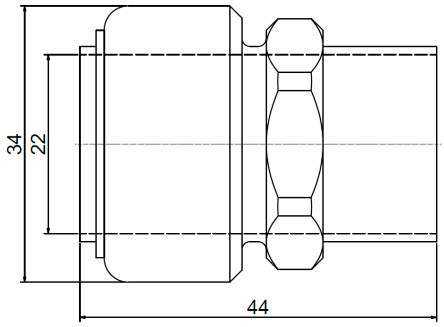

Ordering Information

Ordering Information	Weight KG	Dimension mm
2813101780	0,052	40x26x26
2813201780	0,052	39x29x29
2813211780	0,076	42x35x35
2813301780	0,070	41x34x34
2813311780	0,075	43x34x34
2813421780	0,114	48x42x42

Nipple socket D28 1 ISO7R m

- **Simple, quick assembly for huge time savings**
- **Flexible system for simple release and reconnection**
- **Resistant O-ring made from NBR ensures complete impermeability, even if the air contains oil**
- **Large number of stainless steel retaining claws hold the pipe securely in the plug Connectors**

- **2813101780 Nipple socket D15 1/2 ISO7R m**
- **2813201780 Nipple socket D18 1/2 ISO7R m**
- **2813211780 Nipple socket D18 3/4 ISO7R m**
- **2813301780 Nipple socket D22 1/2 ISO7R m**
- **2813311780 Nipple socket D22 3/4 ISO7R m**
- **2813421780 Nipple socket D28 1 ISO7R m**

- Working pressure range : 16 bar at -20 °C to ≤ +50 °C
- Material: Brass
- Free of Silicone

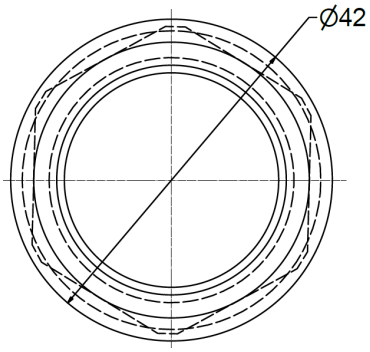

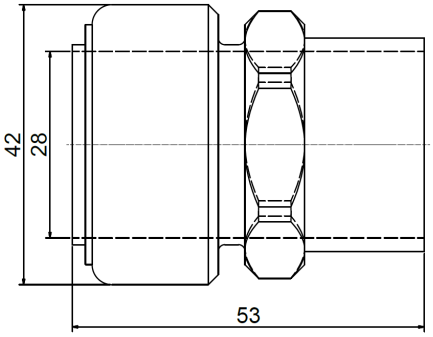

Ordering Information

Ordering Information	Weight KG	Dimension mm
2813101780	0,052	40x26x26
2813201780	0,052	39x29x29
2813211780	0,076	42x35x35
2813301780	0,070	41x34x34
2813311780	0,075	43x34x34
2813421780	0,114	48x42x42

Nipple socket D18 1/2 ISO228 f

- **Simple, quick assembly for huge time savings**
- **Flexible system for simple release and reconnection**
- **Resistant O-ring made from NBR ensures complete impermeability, even if the air contains oil**
- **Large number of stainless steel retaining claws hold the pipe securely in the plug Connectors**

- **2813101980 Nipple socket D15 1/2 ISO228 f**
- **2813201980 Nipple socket D18 1/2 ISO228 f**
- **2813211980 Nipple socket D18 3/4 ISO228 f**
- **2813301980 Nipple socket D22 1/2 ISO228 f**
- **2813311980 Nipple socket D22 3/4 ISO228 f**
- **2813421980 Nipple socket D28 1 ISO228 f**

- Working pressure range : 16 bar at -20 °C to ≤ +50 °C
- Material: Brass
- Free of Silicone

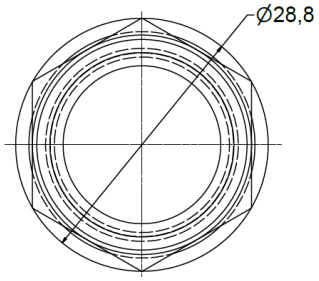

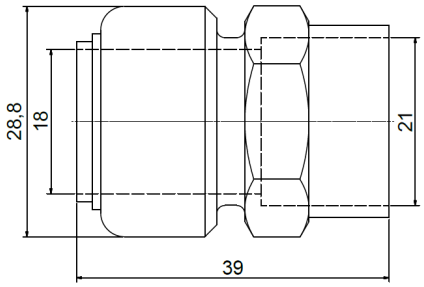

Ordering Information

Ordering Information	Weight KG	Dimension mm
2813101980	0,052	41x26x26
2813201980	0,050	40x31x31
2813211980	0,060	43x37x37
2813301980	0,096	45x34x34
2813311980	0,110	47x34x34
2813421980	0,119	53x41x41

Nipple socket D18 3/4 ISO228 f

- **Simple, quick assembly for huge time savings**
- **Flexible system for simple release and reconnection**
- **Resistant O-ring made from NBR ensures complete impermeability, even if the air contains oil**
- **Large number of stainless steel retaining claws hold the pipe securely in the plug Connectors**

- **2813101980 Nipple socket D15 1/2 ISO228 f**
- **2813201980 Nipple socket D18 1/2 ISO228 f**
- **2813211980 Nipple socket D18 3/4 ISO228 f**
- **2813301980 Nipple socket D22 1/2 ISO228 f**
- **2813311980 Nipple socket D22 3/4 ISO228 f**
- **2813421980 Nipple socket D28 1 ISO228 f**

- Working pressure range : 16 bar at -20 °C to ≤ +50 °C
- Material: Brass
- Free of Silicone

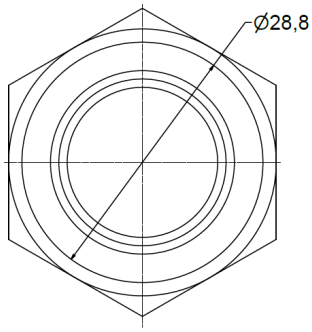

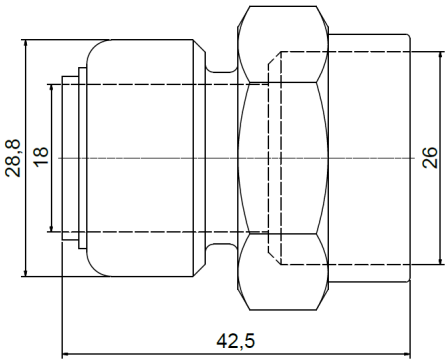

Ordering Information

Ordering Information	Weight KG	Dimension mm
2813101980	0,052	41x26x26
2813201980	0,050	40x31x31
2813211980	0,060	43x37x37
2813301980	0,096	45x34x34
2813311980	0,110	47x34x34
2813421980	0,119	53x41x41

Nipple socket D22 1/2 ISO228 f

- **Simple, quick assembly for huge time savings**
- **Flexible system for simple release and reconnection**
- **Resistant O-ring made from NBR ensures complete impermeability, even if the air contains oil**
- **Large number of stainless steel retaining claws hold the pipe securely in the plug Connectors**

- **2813101980 Nipple socket D15 1/2 ISO228 f**
- **2813201980 Nipple socket D18 1/2 ISO228 f**
- **2813211980 Nipple socket D18 3/4 ISO228 f**
- **2813301980 Nipple socket D22 1/2 ISO228 f**
- **2813311980 Nipple socket D22 3/4 ISO228 f**
- **2813421980 Nipple socket D28 1 ISO228 f**

- Working pressure range : 16 bar at -20 °C to ≤ +50 °C
- Material: Brass
- Free of Silicone

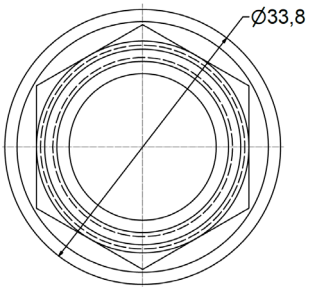

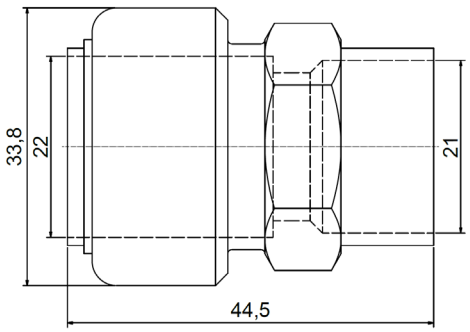

Ordering Information

Ordering Information	Weight KG	Dimension mm
2813101980	0,052	41x26x26
2813201980	0,050	40x31x31
2813211980	0,060	43x37x37
2813301980	0,096	45x34x34
2813311980	0,110	47x34x34
2813421980	0,119	53x41x41

Nipple socket D22 3/4 ISO228 f

- **Simple, quick assembly for huge time savings**
- **Flexible system for simple release and reconnection**
- **Resistant O-ring made from NBR ensures complete impermeability, even if the air contains oil**
- **Large number of stainless steel retaining claws hold the pipe securely in the plug Connectors**

- **2813101980 Nipple socket D15 1/2 ISO228 f**
- **2813201980 Nipple socket D18 1/2 ISO228 f**
- **2813211980 Nipple socket D18 3/4 ISO228 f**
- **2813301980 Nipple socket D22 1/2 ISO228 f**
- **2813311980 Nipple socket D22 3/4 ISO228 f**
- **2813421980 Nipple socket D28 1 ISO228 f**

- Working pressure range : 16 bar at -20 °C to ≤ +50 °C
- Material: Brass
- Free of Silicone

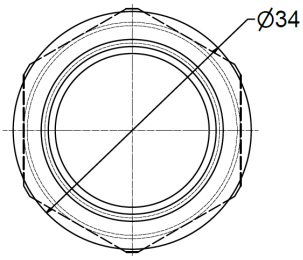

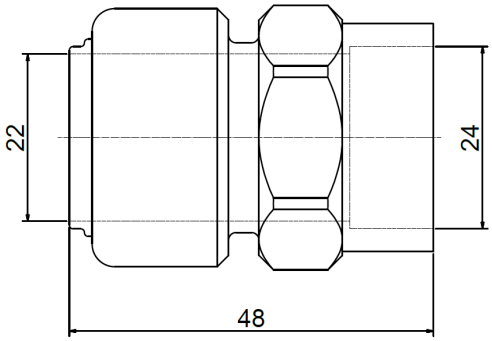

Ordering Information

Ordering Information	Weight KG	Dimension mm
2813101980	0,052	41x26x26
2813201980	0,050	40x31x31
2813211980	0,060	43x37x37
2813301980	0,096	45x34x34
2813311980	0,110	47x34x34
2813421980	0,119	53x41x41

Nipple socket D28 1 ISO228 f

- **Simple, quick assembly for huge time savings**
- **Flexible system for simple release and reconnection**
- **Resistant O-ring made from NBR ensures complete impermeability, even if the air contains oil**
- **Large number of stainless steel retaining claws hold the pipe securely in the plug Connectors**

- **2813101980 Nipple socket D15 1/2 ISO228 f**
- **2813201980 Nipple socket D18 1/2 ISO228 f**
- **2813211980 Nipple socket D18 3/4 ISO228 f**
- **2813301980 Nipple socket D22 1/2 ISO228 f**
- **2813311980 Nipple socket D22 3/4 ISO228 f**
- **2813421980 Nipple socket D28 1 ISO228 f**

- Working pressure range : 16 bar at -20 °C to ≤ +50 °C
- Material: Brass
- Free of Silicone

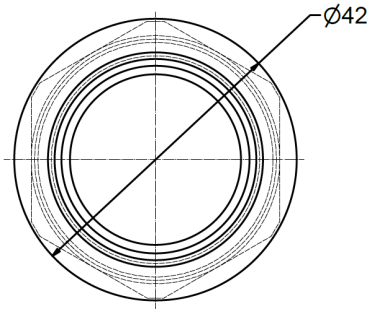

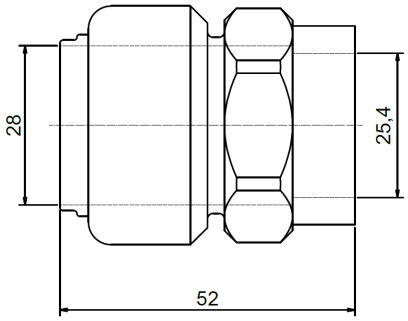

Ordering Information

Ordering Information	Weight KG	Dimension mm
2813101980	0,052	41x26x26
2813201980	0,050	40x31x31
2813211980	0,060	43x37x37
2813301980	0,096	45x34x34
2813311980	0,110	47x34x34
2813421980	0,119	53x41x41

Equal socket D15

- **Simple, quick assembly for huge time savings**
- **Flexible system for simple release and reconnection**
- **Resistant O-ring made from NBR ensures complete impermeability, even if the air contains oil**
- **Large number of stainless-steel retaining claws hold the pipe securely in the plug Connectors**

- **2813100280 Equal socket D15**
- **2813200280 Equal socket D18**
- **2813300280 Equal socket D22**
- **2813400280 Equal socket D28**

- Working pressure range : 16 bar at -20 °C to ≤ +50 °C
- Material: Brass
- Free of Silicone

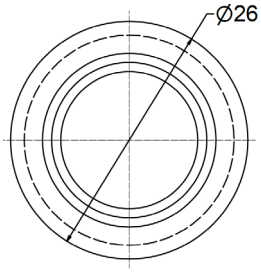

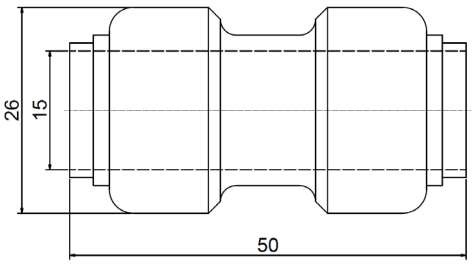

Ordering Information

Ordering Information	Weight KG	Dimension mm
2813100280	0,045	48x26x26
2813200280	0,064	49x29x29
2813300280	0,082	58x34x34
2813400280	0,200	68x41x41

Equal socket D18

- **Simple, quick assembly for huge time savings**
- **Flexible system for simple release and reconnection**
- **Resistant O-ring made from NBR ensures complete impermeability, even if the air contains oil**
- **Large number of stainless steel retaining claws hold the pipe securely in the plug Connectors**

- **2813100280 Equal socket D15**
- **2813200280 Equal socket D18**
- **2813300280 Equal socket D22**
- **2813400280 Equal socket D28**

- Working pressure range : 16 bar at -20 °C to ≤ +50 °C
- Material: Brass
- Free of Silicone

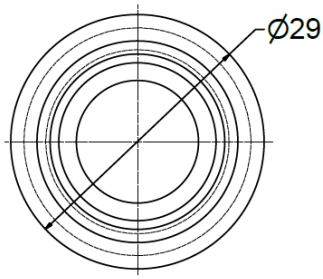

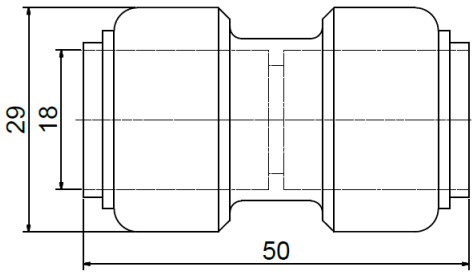

Ordering Information

Ordering Information	Weight KG	Dimension mm
2813100280	0,045	48x26x26
2813200280	0,064	49x29x29
2813300280	0,082	58x34x34
2813400280	0,200	68x41x41

Equal socket D22

- **Simple, quick assembly for huge time savings**
- **Flexible system for simple release and reconnection**
- **Resistant O-ring made from NBR ensures complete impermeability, even if the air contains oil**
- **Large number of stainless steel retaining claws hold the pipe securely in the plug Connectors**

- **2813100280 Equal socket D15**
- **2813200280 Equal socket D18**
- **2813300280 Equal socket D22**
- **2813400280 Equal socket D28**

- Working pressure range : 16 bar at -20 °C to ≤ +50 °C
- Material: Brass
- Free of Silicone

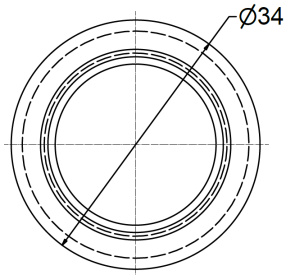

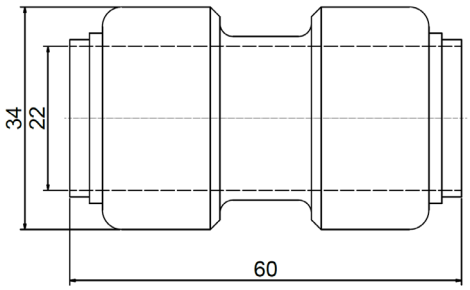

Ordering Information

Ordering Information	Weight KG	Dimension mm
2813100280	0,045	48x26x26
2813200280	0,064	49x29x29
2813300280	0,082	58x34x34
2813400280	0,200	68x41x41

Equal socket D28

- **Simple, quick assembly for huge time savings**
- **Flexible system for simple release and reconnection**
- **Resistant O-ring made from NBR ensures complete impermeability, even if the air contains oil**
- **Large number of stainless steel retaining claws hold the pipe securely in the plug Connectors**

- **2813100280 Equal socket D15**
- **2813200280 Equal socket D18**
- **2813300280 Equal socket D22**
- **2813400280 Equal socket D28**

- Working pressure range : 16 bar at -20 °C to ≤ +50 °C
- Material: Brass
- Free of Silicone

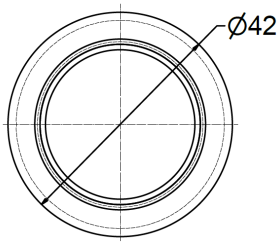

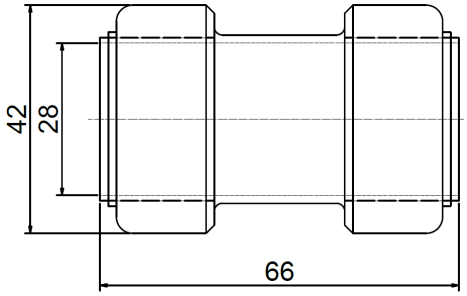

Ordering Information

Ordering Information	Weight KG	Dimension mm
2813100280	0,045	48x26x26
2813200280	0,064	49x29x29
2813300280	0,082	58x34x34
2813400280	0,200	68x41x41

90 Deg Elbow D15

- **Simple, quick assembly for huge time savings**
- **Flexible system for simple release and reconnection**
- **Resistant O-ring made from NBR ensures complete impermeability, even if the air contains oil**
- **Large number of stainless steel retaining claws hold the pipe securely in the plug Connectors**

- **2813100380 90 Deg Elbow D15**
- **2813200380 90 Deg Elbow D18**
- **2813300380 90 Deg Elbow D22**
- **2813400380 90 Deg Elbow D28**

- Working pressure range : 16 bar at -20 °C to ≤ +50 °C
- Material: Brass
- Free of Silicone

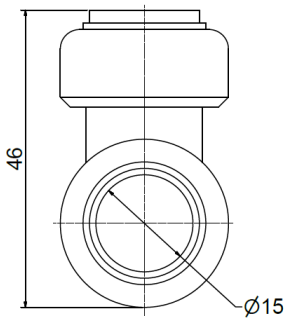

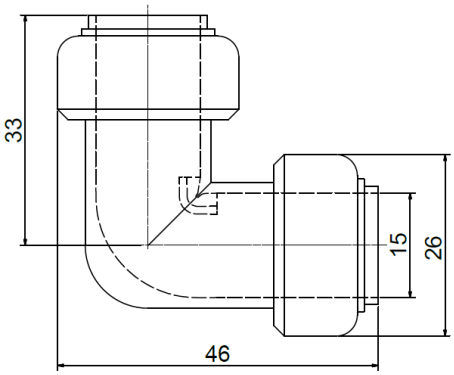

Ordering Information

Ordering Information	Weight KG	Dimension mm
2813100380	0,058	45x26x45
2813200380	0,067	48x29x48
2813300380	0,109	58x34x58
2813400380	0,170	68x41x68

90 Deg Elbow D18

- **Simple, quick assembly for huge time savings**
- **Flexible system for simple release and reconnection**
- **Resistant O-ring made from NBR ensures complete impermeability, even if the air contains oil**
- **Large number of stainless steel retaining claws hold the pipe securely in the plug Connectors**

- **2813100380 90 Deg Elbow D15**
- **2813200380 90 Deg Elbow D18**
- **2813300380 90 Deg Elbow D22**
- **2813400380 90 Deg Elbow D28**

- Working pressure range : 16 bar at -20 °C to ≤ +50 °C
- Material: Brass
- Free of Silicone

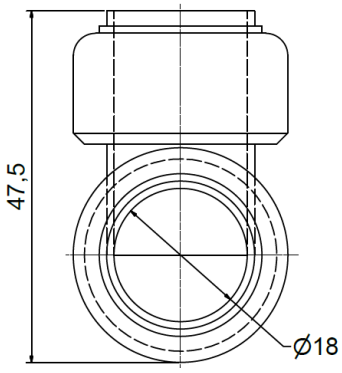

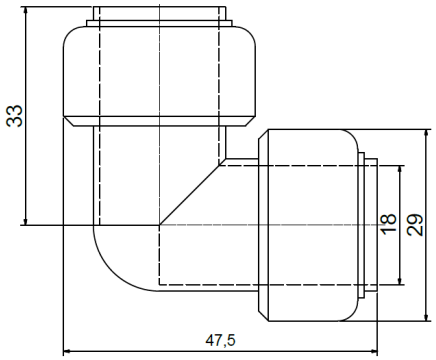

Ordering Information

Ordering Information	Weight KG	Dimension mm
2813100380	0,058	45x26x45
2813200380	0,067	48x29x48
2813300380	0,109	58x34x58
2813400380	0,170	68x41x68

90 Deg Elbow D22

- **Simple, quick assembly for huge time savings**
- **Flexible system for simple release and reconnection**
- **Resistant O-ring made from NBR ensures complete impermeability, even if the air contains oil**
- **Large number of stainless steel retaining claws hold the pipe securely in the plug Connectors**

- **2813100380 90 Deg Elbow D15**
- **2813200380 90 Deg Elbow D18**
- **2813300380 90 Deg Elbow D22**
- **2813400380 90 Deg Elbow D28**

- Working pressure range : 16 bar at -20 °C to ≤ +50 °C
- Material: Brass
- Free of Silicone

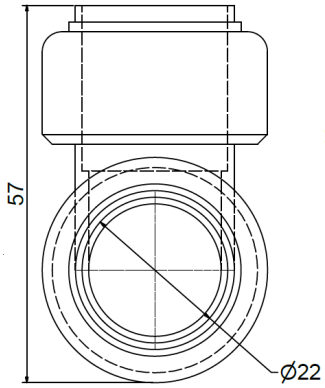

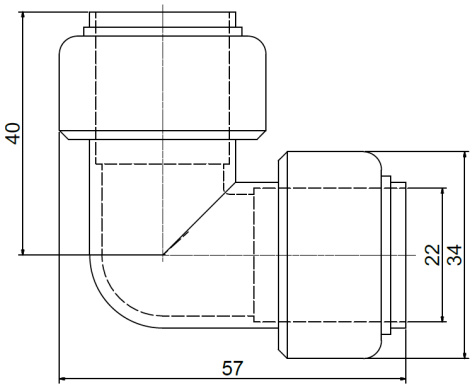

Ordering Information

Ordering Information	Weight KG	Dimension mm
2813100380	0,058	45x26x45
2813200380	0,067	48x29x48
2813300380	0,109	58x34x58
2813400380	0,170	68x41x68

90 Deg Elbow D28

- **Simple, quick assembly for huge time savings**
- **Flexible system for simple release and reconnection**
- **Resistant O-ring made from NBR ensures complete impermeability, even if the air contains oil**
- **Large number of stainless steel retaining claws hold the pipe securely in the plug Connectors**

- **2813100380 90 Deg Elbow D15**
- **2813200380 90 Deg Elbow D18**
- **2813300380 90 Deg Elbow D22**
- **2813400380 90 Deg Elbow D28**

- Working pressure range : 16 bar at -20 °C to ≤ +50 °C
- Material: Brass
- Free of Silicone

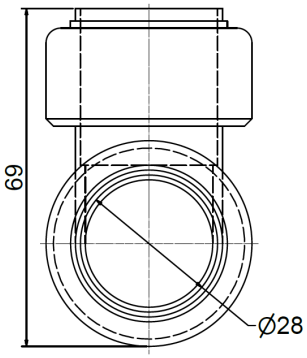

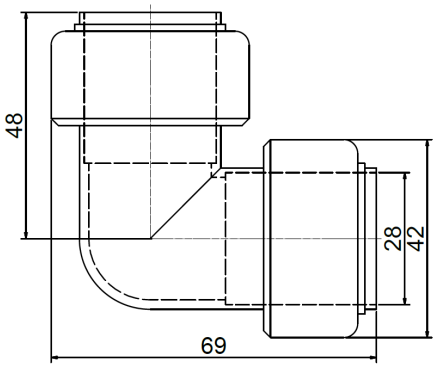

Ordering Information

Ordering Information	Weight KG	Dimension mm
2813100380	0,058	45x26x45
2813200380	0,067	48x29x48
2813300380	0,109	58x34x58
2813400380	0,170	68x41x68

45 Deg Elbow D15

- **Simple, quick assembly for huge time savings**
- **Flexible system for simple release and reconnection**
- **Resistant O-ring made from NBR ensures complete impermeability, even if the air contains oil**
- **Large number of stainless steel retaining claws hold the pipe securely in the plug Connectors**

- **2813100480 45 Deg Elbow D15**
- **2813200480 45 Deg Elbow D18**
- **2813300480 45 Deg Elbow D22**
- **2813400480 45 Deg Elbow D28**

- Working pressure range : 16 bar at -20 °C to ≤ +50 °C
- Material: Brass
- Free of Silicone

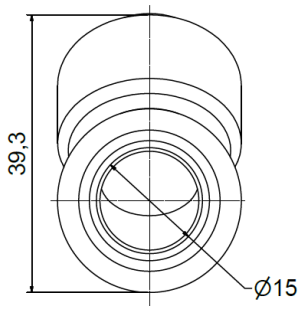

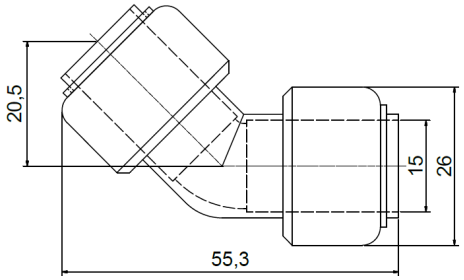

Ordering Information

Ordering Information	Weight KG	Dimension mm
2813100480	0,053	57x26x33
2813200480	0,060	61x29x35
2813300480	0,132	68x34x51
2813400480	0,240	80x41x62

45 Deg Elbow D22

- **Simple, quick assembly for huge time savings**
- **Flexible system for simple release and reconnection**
- **Resistant O-ring made from NBR ensures complete impermeability, even if the air contains oil**
- **Large number of stainless steel retaining claws hold the pipe securely in the plug Connectors**

- **2813100480 45 Deg Elbow D15**
- **2813200480 45 Deg Elbow D18**
- **2813300480 45 Deg Elbow D22**
- **2813400480 45 Deg Elbow D28**

- Working pressure range : 16 bar at -20 °C to ≤ +50 °C
- Material: Brass
- Free of Silicone

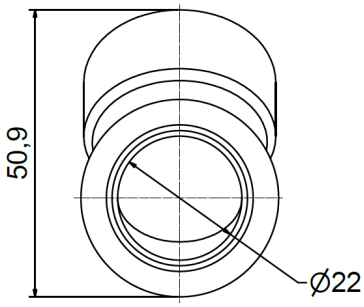

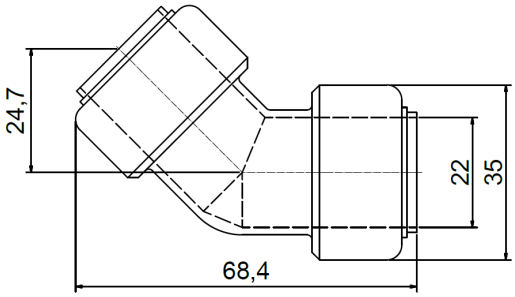

Ordering Information

Ordering Information	Weight KG	Dimension mm
2813100480	0,053	57x26x33
2813200480	0,060	61x29x35
2813300480	0,132	68x34x51
2813400480	0,240	80x41x62

45 Deg Elbow D28

- **Simple, quick assembly for huge time savings**
- **Flexible system for simple release and reconnection**
- **Resistant O-ring made from NBR ensures complete impermeability, even if the air contains oil**
- **Large number of stainless steel retaining claws hold the pipe securely in the plug Connectors**

- **2813100480 45 Deg Elbow D15**
- **2813200480 45 Deg Elbow D18**
- **2813300480 45 Deg Elbow D22**
- **2813400480 45 Deg Elbow D28**

- Working pressure range : 16 bar at -20 °C to ≤ +50 °C
- Material: Brass
- Free of Silicone

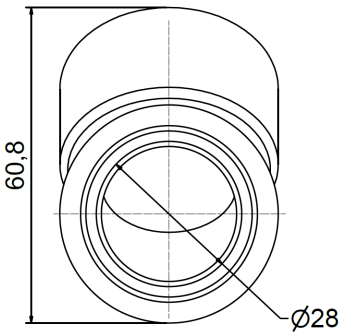

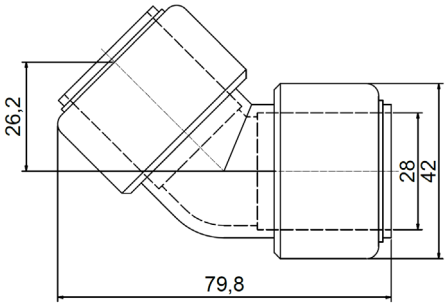

Ordering Information

Ordering Information	Weight KG	Dimension mm
2813100480	0,053	57x26x33
2813200480	0,060	61x29x35
2813300480	0,132	68x34x51
2813400480	0,240	80x41x62

90 Deg Elbow D15-1/2 ISO7R m

- **Simple, quick assembly for huge time savings**
- **Flexible system for simple release and reconnection**
- **Resistant O-ring made from NBR ensures complete impermeability, even if the air contains oil**
- **Large number of stainless steel retaining claws hold the pipe securely in the plug Connectors**

- **2813100381 90 Deg Elbow D15-1/2 ISO7R m**
- **2813200381 90 Deg Elbow D18-1/2 ISO7R m**
- **2813300381 90 Deg Elbow D22-1/2 ISO7R m**
- **2813400381 90 Deg Elbow D28-1/2 ISO7R m**

- Working pressure range : 16 bar at -20 °C to ≤ +50 °C
- Material: Brass
- Free of Silicone

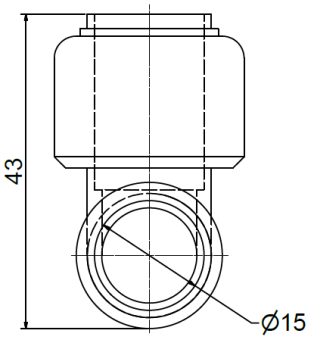

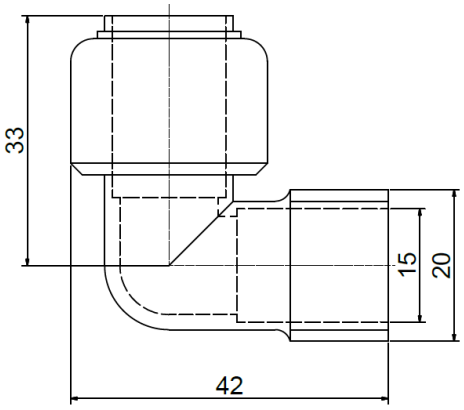

Ordering Information

Ordering Information	Weight KG	Dimension mm
2813100381	0,058	45x26x42
2813200381	0,061	48x29x43
2813300381	0,099	58x34x51
2813400381	0,215	68x41x58

Equal tee D15

- **Simple, quick assembly for huge time savings**
- **Flexible system for simple release and reconnection**
- **Resistant O-ring made from NBR ensures complete impermeability, even if the air contains oil**
- **Large number of stainless steel retaining claws hold the pipe securely in the plug Connectors**

- **2813100580 Equal tee D15**
- **2813200580 Equal tee D18**
- **2813300580 Equal tee D22**
- **2813400580 Equal tee D28**

- Working pressure range : 16 bar at -20 °C to ≤ +50 °C
- Material: Brass
- Free of Silicone

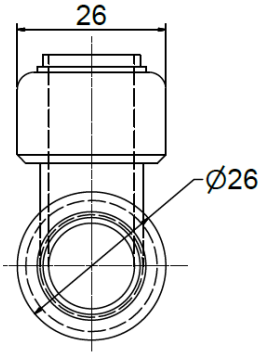

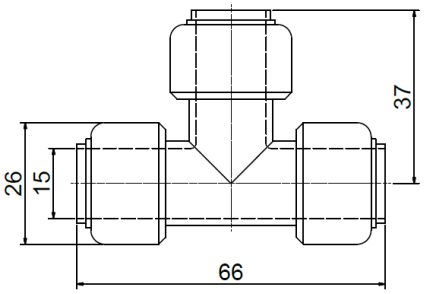

Ordering Information

Ordering Information	Weight KG	Dimension mm
2813100580	0,080	65x26x45
2813200580	0,092	67x29x47
2813300580	0,148	81x34x57
2813400580	0,275	95x41x68

Equal tee D22

- **Simple, quick assembly for huge time savings**
- **Flexible system for simple release and reconnection**
- **Resistant O-ring made from NBR ensures complete impermeability, even if the air contains oil**
- **Large number of stainless steel retaining claws hold the pipe securely in the plug Connectors**

- **2813100580 Equal tee D15**
- **2813200580 Equal tee D18**
- **2813300580 Equal tee D22**
- **2813400580 Equal tee D28**

- Working pressure range : 16 bar at -20 °C to ≤ +50 °C
- Material: Brass
- Free of Silicone

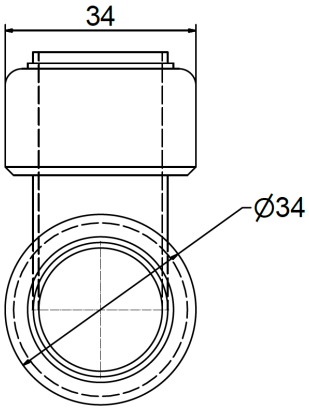

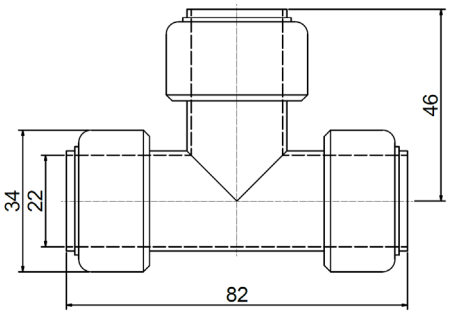

Ordering Information

Ordering Information	Weight KG	Dimension mm
2813100580	0,080	65x26x45
2813200580	0,092	67x29x47
2813300580	0,148	81x34x57
2813400580	0,275	95x41x68

Equal tee D28

- **Simple, quick assembly for huge time savings**
- **Flexible system for simple release and reconnection**
- **Resistant O-ring made from NBR ensures complete impermeability, even if the air contains oil**
- **Large number of stainless steel retaining claws hold the pipe securely in the plug Connectors**

- **2813100580 Equal tee D15**
- **2813200580 Equal tee D18**
- **2813300580 Equal tee D22**
- **2813400580 Equal tee D28**

- Working pressure range : 16 bar at -20 °C to ≤ +50 °C
- Material: Brass
- Free of Silicone

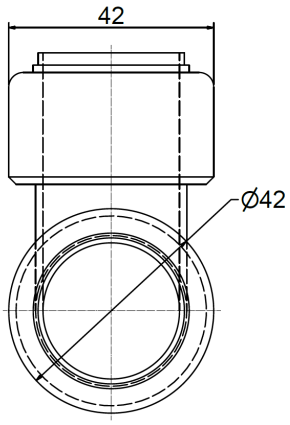

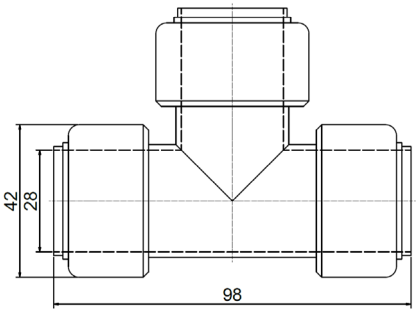

Ordering Information

Ordering Information	Weight KG	Dimension mm
2813100580	0,080	65x26x45
2813200580	0,092	67x29x47
2813300580	0,148	81x34x57
2813400580	0,275	95x41x68

Equal tee D15

- **Simple, quick assembly for huge time savings**
- **Flexible system for simple release and reconnection**
- **Resistant O-ring made from NBR ensures complete impermeability, even if the air contains oil**
- **Large number of stainless steel retaining claws hold the pipe securely in the plug Connectors**

- **2813100580 Equal tee D15**
- **2813200580 Equal tee D18**
- **2813300580 Equal tee D22**
- **2813400580 Equal tee D28**

- Working pressure range : 16 bar at -20 °C to ≤ +50 °C
- Material: Brass
- Free of Silicone

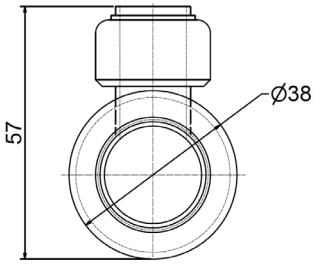

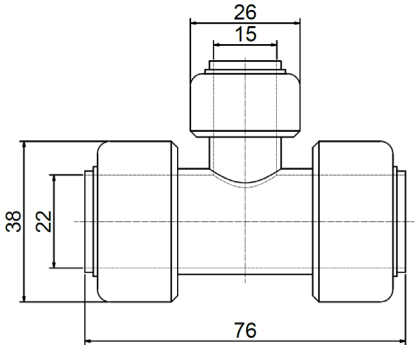

Ordering Information

Ordering Information	Weight KG	Dimension mm
2813100580	0,080	65x26x45
2813200580	0,092	67x29x47
2813300580	0,148	81x34x57
2813400580	0,275	95x41x68

Reduction tee D28 D22 D28

- **Simple, quick assembly for huge time savings**
- **Flexible system for simple release and reconnection**
- **Resistant O-ring made from NBR ensures complete impermeability, even if the air contains oil**
- **Large number of stainless steel retaining claws hold the pipe securely in the plug Connectors**

- **2813310780 Reduction tee D22 D15 D22**
- **2813320780 Reduction tee D22 D18 D22**
- **2813420780 Reduction tee D28 D18 D28**
- **2813430781 Reduction tee D28 D22 D22**
- **2813430780 Reduction tee D28 D22 D28**

- Working pressure range : 16 bar at -20 °C to ≤ +50 °C
- Material: Brass
- Free of Silicone

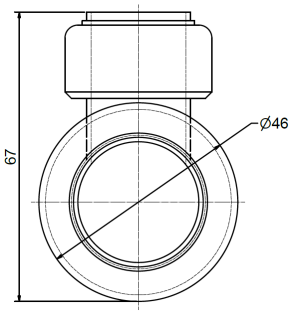

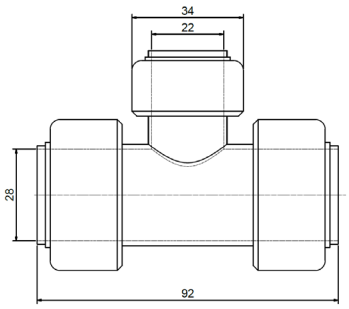

Ordering Information

Ordering Information	Weight KG	Dimension mm
2813310780	0,120	73x34x55
2813320780	0,135	77x34x52
2813420780	0,240	91x41x63
2813430781	0,248	82x41x63
2813430780	0,260	91x41x65

Pipe end adapter D22-D15

- **Simple, quick assembly for huge time savings**
- **Flexible system for simple release and reconnection**
- **Resistant O-ring made from NBR ensures complete impermeability, even if the air contains oil**
- **Large number of stainless steel retaining claws hold the pipe securely in the plug Connectors**

- **2813316280 Pipe end adapter D22-D15**
- **2813326280 Pipe end adapter D22-D18**
- **2813426280 Pipe end adapter D28-D18**
- **2813436280 Pipe end adapter D28-D22**

- Working pressure range : 16 bar at -20 °C to ≤ +50 °C
- Material: Brass
- Free of Silicone

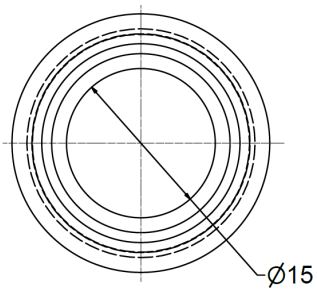

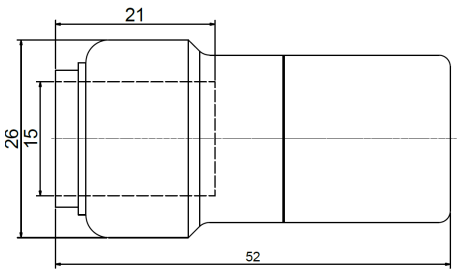

Ordering Information

Ordering Information	Weight KG	Dimension mm
2813316280	0,040	46x22x22
2813326280	0,042	48x22x22
2813426280	0,056	54x28x28
2813436280	0,075	56x28x28

Pipe end adapter D28-D22

- **Simple, quick assembly for huge time savings**
- **Flexible system for simple release and reconnection**
- **Resistant O-ring made from NBR ensures complete impermeability, even if the air contains oil**
- **Large number of stainless steel retaining claws hold the pipe securely in the plug Connectors**

- **2813316280 Pipe end adapter D22-D15**
- **2813326280 Pipe end adapter D22-D18**
- **2813426280 Pipe end adapter D28-D18**
- **2813436280 Pipe end adapter D28-D22**

- Working pressure range : 16 bar at -20 °C to ≤ +50 °C
- Material: Brass
- Free of Silicone

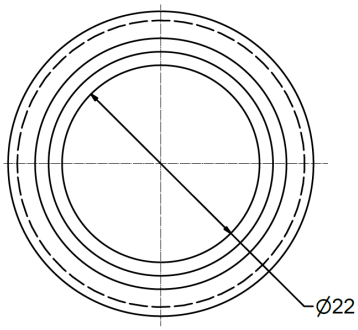

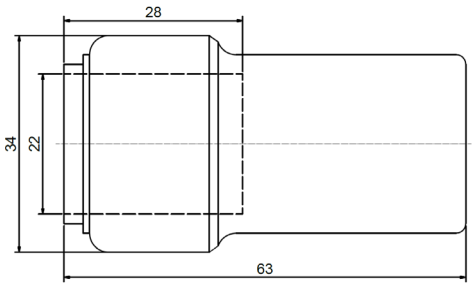

Ordering Information

Ordering Information	Weight KG	Dimension mm
2813316280	0,040	46x22x22
2813326280	0,042	48x22x22
2813426280	0,056	54x28x28
2813436280	0,075	56x28x28

Sliding equal socket D15

- **Simple, quick assembly for huge time savings**
- **Flexible system for simple release and reconnection**
- **Resistant O-ring made from NBR ensures complete impermeability, even if the air contains oil**
- **Large number of stainless steel retaining claws hold the pipe securely in the plug Connectors**

- **2813100281 Sliding equal socket D15**
- **2813200281 Sliding equal socket D18**
- **2813300281 Sliding equal socket D22**
- **2813400281 Sliding equal socket D28**

- Working pressure range : 16 bar at -20 °C to ≤ +50 °C
- Material: Brass
- Free of Silicone

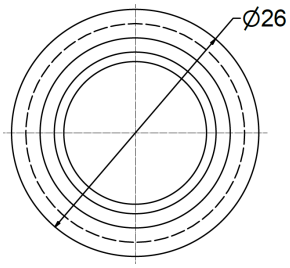

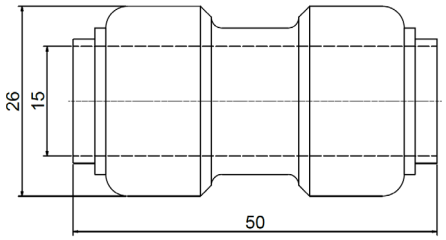

Ordering Information

Ordering Information	Weight KG	Dimension mm
2813100281	0,045	48x26x26
2813200281	0,064	49x29x29
2813300281	0,082	58x34x34
2813400281	0,200	68x41x41

Sliding equal socket D18

- **Simple, quick assembly for huge time savings**
- **Flexible system for simple release and reconnection**
- **Resistant O-ring made from NBR ensures complete impermeability, even if the air contains oil**
- **Large number of stainless steel retaining claws hold the pipe securely in the plug Connectors**

- **2813100281 Sliding equal socket D15**
- **2813200281 Sliding equal socket D18**
- **2813300281 Sliding equal socket D22**
- **2813400281 Sliding equal socket D28**

- Working pressure range : 16 bar at -20 °C to ≤ +50 °C
- Material: Brass
- Free of Silicone

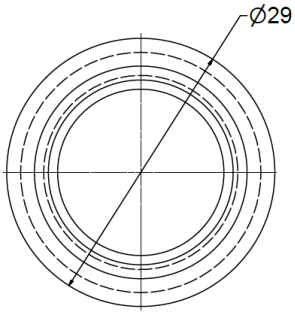

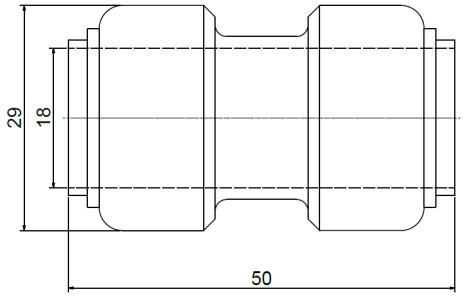

Ordering Information

Ordering Information	Weight KG	Dimension mm
2813100281	0,045	48x26x26
2813200281	0,064	49x29x29
2813300281	0,082	58x34x34
2813400281	0,200	68x41x41

Sliding equal socket D22

- **Simple, quick assembly for huge time savings**
- **Flexible system for simple release and reconnection**
- **Resistant O-ring made from NBR ensures complete impermeability, even if the air contains oil**
- **Large number of stainless steel retaining claws hold the pipe securely in the plug Connectors**

- **2813100281 Sliding equal socket D15**
- **2813200281 Sliding equal socket D18**
- **2813300281 Sliding equal socket D22**
- **2813400281 Sliding equal socket D28**

- Working pressure range : 16 bar at -20 °C to ≤ +50 °C
- Material: Brass
- Free of Silicone

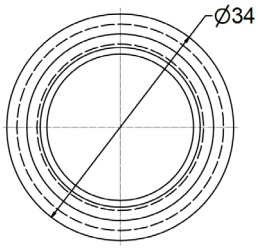

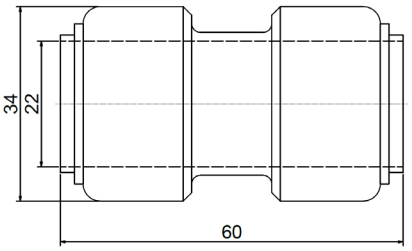

Ordering Information

Ordering Information	Weight KG	Dimension mm
2813100281	0,045	48x26x26
2813200281	0,064	49x29x29
2813300281	0,082	58x34x34
2813400281	0,200	68x41x41

Sliding equal socket D28

- **Simple, quick assembly for huge time savings**
- **Flexible system for simple release and reconnection**
- **Resistant O-ring made from NBR ensures complete impermeability, even if the air contains oil**
- **Large number of stainless steel retaining claws hold the pipe securely in the plug Connectors**

- **2813100281 Sliding equal socket D15**
- **2813200281 Sliding equal socket D18**
- **2813300281 Sliding equal socket D22**
- **2813400281 Sliding equal socket D28**

- Working pressure range : 16 bar at -20 °C to ≤ +50 °C
- Material: Brass
- Free of Silicone

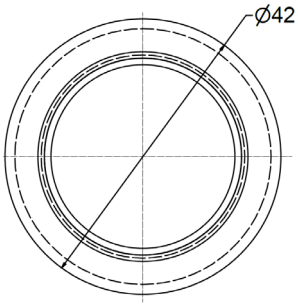

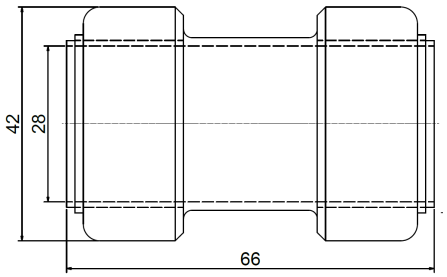

Ordering Information

Ordering Information	Weight KG	Dimension mm
2813100281	0,045	48x26x26
2813200281	0,064	49x29x29
2813300281	0,082	58x34x34
2813400281	0,200	68x41x41

End cap D15

- **Simple, quick assembly for huge time savings**
- **Flexible system for simple release and reconnection**
- **Resistant O-ring made from NBR ensures complete impermeability, even if the air contains oil**
- **Large number of stainless steel retaining claws hold the pipe securely in the plug Connectors**

- **2813100680 End cap D15**
- **2813200680 End cap D18**
- **2813300680 End cap D22**
- **2813400680 End cap D28**

- Working pressure range : 16 bar at -20 °C to ≤ +50 °C
- Material: Brass
- Free of Silicone

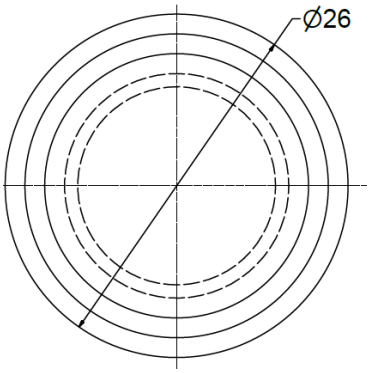

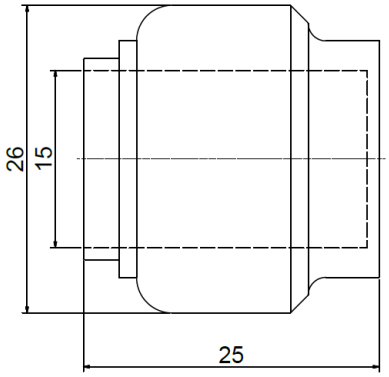

Ordering Information

Ordering Information	Weight KG	Dimension mm
2813100680	0,027	26x26x26
2813200680	0,031	26x29x29
2813300680	0,048	31x34x34
2813400680	0,070	35x41x41

End cap D18

- **Simple, quick assembly for huge time savings**
- **Flexible system for simple release and reconnection**
- **Resistant O-ring made from NBR ensures complete impermeability, even if the air contains oil**
- **Large number of stainless steel retaining claws hold the pipe securely in the plug Connectors**

- **2813100680 End cap D15**
- **2813200680 End cap D18**
- **2813300680 End cap D22**
- **2813400680 End cap D28**

- Working pressure range : 16 bar at -20 °C to ≤ +50 °C
- Material: Brass
- Free of Silicone

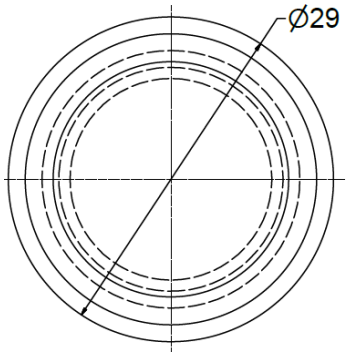

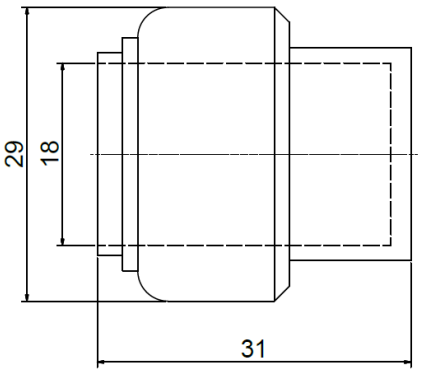

Ordering Information

Ordering Information	Weight KG	Dimension mm
2813100680	0,027	26x26x26
2813200680	0,031	26x29x29
2813300680	0,048	31x34x34
2813400680	0,070	35x41x41

End cap D22

- **Simple, quick assembly for huge time savings**
- **Flexible system for simple release and reconnection**
- **Resistant O-ring made from NBR ensures complete impermeability, even if the air contains oil**
- **Large number of stainless steel retaining claws hold the pipe securely in the plug Connectors**

- **2813100680 End cap D15**
- **2813200680 End cap D18**
- **2813300680 End cap D22**
- **2813400680 End cap D28**

- Working pressure range : 16 bar at -20 °C to ≤ +50 °C
- Material: Brass
- Free of Silicone

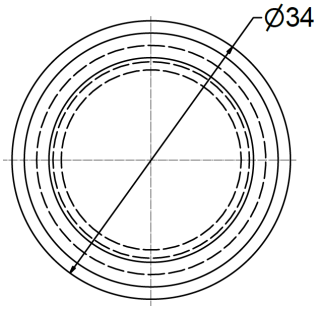

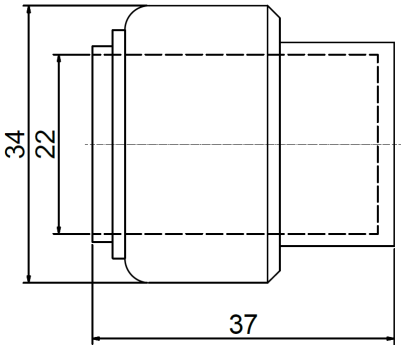

Ordering Information

Ordering Information	Weight KG	Dimension mm
2813100680	0,027	26x26x26
2813200680	0,031	26x29x29
2813300680	0,048	31x34x34
2813400680	0,070	35x41x41

End cap D28

- **Simple, quick assembly for huge time savings**
- **Flexible system for simple release and reconnection**
- **Resistant O-ring made from NBR ensures complete impermeability, even if the air contains oil**
- **Large number of stainless steel retaining claws hold the pipe securely in the plug Connectors**

- **2813100680 End cap D15**
- **2813200680 End cap D18**
- **2813300680 End cap D22**
- **2813400680 End cap D28**

- Working pressure range : 16 bar at -20 °C to ≤ +50 °C
- Material: Brass
- Free of Silicone

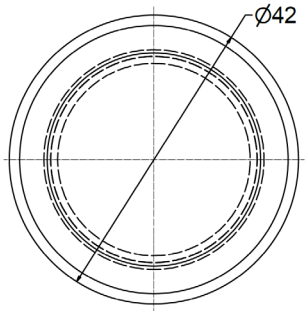

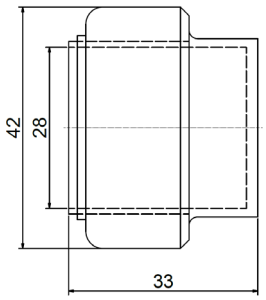

Ordering Information

Ordering Information	Weight KG	Dimension mm
2813100680	0,027	26x26x26
2813200680	0,031	26x29x29
2813300680	0,048	31x34x34
2813400680	0,070	35x41x41

Threaded ad. D15-1/2 ISO7R m

- **Simple, quick assembly for huge time savings**
- **Flexible system for simple release and reconnection**
- **Resistant O-ring made from NBR ensures complete impermeability, even if the air contains oil**
- **Large number of stainless steel retaining claws hold the pipe securely in the plug Connectors**

- **2813101300 Threaded ad. D15-1/2 ISO7R m**
- **2813201300 Threaded ad. D18-1/2 ISO7R m**
- **2813211300 Threaded ad. D18-3/4 ISO7R m**
- **2813301300 Threaded ad. D22-1/2 ISO7R m**
- **2813311300 Threaded ad. D22-3/4 ISO7R m**
- **2813421300 Threaded ad. D28-1 ISO7R m**

- Working pressure range : 16 bar at -20 °C to ≤ +50 °C
- Material: Brass
- Free of Silicone

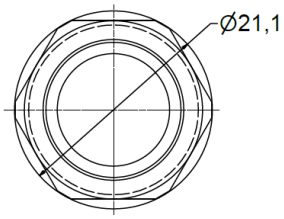

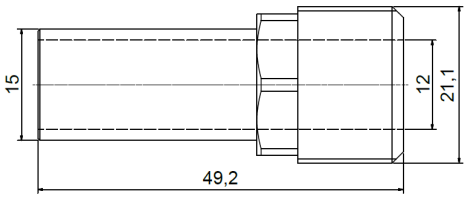

Ordering Information

Ordering Information	Weight KG	Dimension mm
2813101300	0,040	45x24x24
2813201300	0,050	48x27x27
2813211300	0,065	48x27x27
2813301300	0,068	52x27x27
2813311300	0,073	52x27x27
2813421300	0,125	57x33x33

Threaded ad. D18-1/2 ISO7R m

- **Simple, quick assembly for huge time savings**
- **Flexible system for simple release and reconnection**
- **Resistant O-ring made from NBR ensures complete impermeability, even if the air contains oil**
- **Large number of stainless steel retaining claws hold the pipe securely in the plug Connectors**

- **2813101300 Threaded ad. D15-1/2 ISO7R m**
- **2813201300 Threaded ad. D18-1/2 ISO7R m**
- **2813211300 Threaded ad. D18-3/4 ISO7R m**
- **2813301300 Threaded ad. D22-1/2 ISO7R m**
- **2813311300 Threaded ad. D22-3/4 ISO7R m**
- **2813421300 Threaded ad. D28-1 ISO7R m**

- Working pressure range : 16 bar at -20 °C to ≤ +50 °C
- Material: Brass
- Free of Silicone

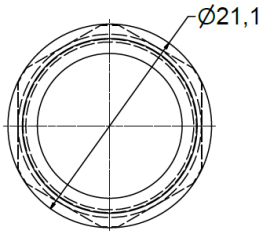

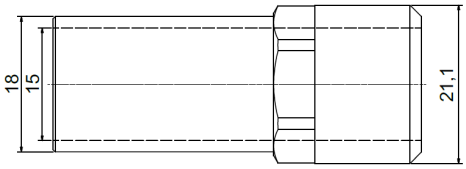

Ordering Information

Ordering Information	Weight KG	Dimension mm
2813101300	0,040	45x24x24
2813201300	0,050	48x27x27
2813211300	0,065	48x27x27
2813301300	0,068	52x27x27
2813311300	0,073	52x27x27
2813421300	0,125	57x33x33

Threaded ad. D18-3/4 ISO7R m

- **Simple, quick assembly for huge time savings**
- **Flexible system for simple release and reconnection**
- **Resistant O-ring made from NBR ensures complete impermeability, even if the air contains oil**
- **Large number of stainless steel retaining claws hold the pipe securely in the plug Connectors**

- **2813101300 Threaded ad. D15-1/2 ISO7R m**
- **2813201300 Threaded ad. D18-1/2 ISO7R m**
- **2813211300 Threaded ad. D18-3/4 ISO7R m**
- **2813301300 Threaded ad. D22-1/2 ISO7R m**
- **2813311300 Threaded ad. D22-3/4 ISO7R m**
- **2813421300 Threaded ad. D28-1 ISO7R m**

- Working pressure range : 16 bar at -20 °C to ≤ +50 °C
- Material: Brass
- Free of Silicone

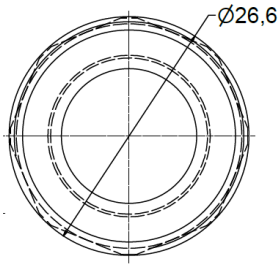

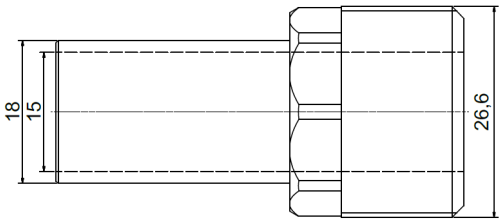

Ordering Information

Ordering Information	Weight KG	Dimension mm
2813101300	0,040	45x24x24
2813201300	0,050	48x24x24
2813211300	0,065	48x27x27
2813301300	0,068	52x24x24
2813311300	0,073	52x27x27
2813421300	0,125	57x33x33

Threaded ad. D22-1/2 ISO7R m

- **Simple, quick assembly for huge time savings**
- **Flexible system for simple release and reconnection**
- **Resistant O-ring made from NBR ensures complete impermeability, even if the air contains oil**
- **Large number of stainless steel retaining claws hold the pipe securely in the plug Connectors**

- **2813101300 Threaded ad. D15-1/2 ISO7R m**
- **2813201300 Threaded ad. D18-1/2 ISO7R m**
- **2813211300 Threaded ad. D18-3/4 ISO7R m**
- **2813301300 Threaded ad. D22-1/2 ISO7R m**
- **2813311300 Threaded ad. D22-3/4 ISO7R m**
- **2813421300 Threaded ad. D28-1 ISO7R m**

- Working pressure range : 16 bar at -20 °C to ≤ +50 °C
- Material: Brass
- Free of Silicone

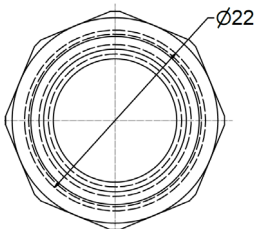

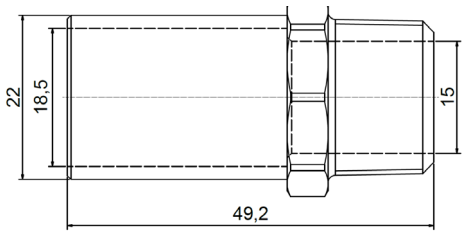

Ordering Information

Ordering Information	Weight KG	Dimension mm
2813101300	0,040	45x24x24
2813201300	0,050	48x24x24
2813211300	0,065	48x27x27
2813301300	0,068	52x24x24
2813311300	0,073	52x27x27
2813421300	0,125	57x33x33

Threaded ad. D22-3/4 ISO7R m

- **Simple, quick assembly for huge time savings**
- **Flexible system for simple release and reconnection**
- **Resistant O-ring made from NBR ensures complete impermeability, even if the air contains oil**
- **Large number of stainless steel retaining claws hold the pipe securely in the plug Connectors**

- **2813101300 Threaded ad. D15-1/2 ISO7R m**
- **2813201300 Threaded ad. D18-1/2 ISO7R m**
- **2813211300 Threaded ad. D18-3/4 ISO7R m**
- **2813301300 Threaded ad. D22-1/2 ISO7R m**
- **2813311300 Threaded ad. D22-3/4 ISO7R m**
- **2813421300 Threaded ad. D28-1 ISO7R m**

- Working pressure range : 16 bar at -20 °C to ≤ +50 °C
- Material: Brass
- Free of Silicone

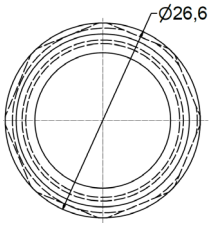

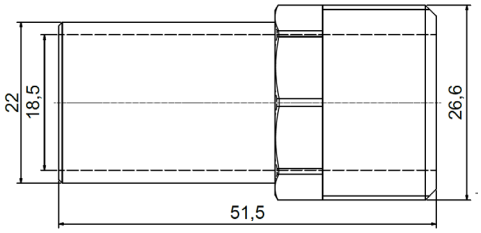

Ordering Information

Ordering Information	Weight KG	Dimension mm
2813101300	0,040	45x24x24
2813201300	0,050	48x24x24
2813211300	0,065	48x27x27
2813301300	0,068	52x24x24
2813311300	0,073	52x27x27
2813421300	0,125	57x33x33

Threaded ad. D28-1 ISO7R m

- **Simple, quick assembly for huge time savings**
- **Flexible system for simple release and reconnection**
- **Resistant O-ring made from NBR ensures complete impermeability, even if the air contains oil**
- **Large number of stainless steel retaining claws hold the pipe securely in the plug Connectors**

- **2813101300 Threaded ad. D15-1/2 ISO7R m**
- **2813201300 Threaded ad. D18-1/2 ISO7R m**
- **2813211300 Threaded ad. D18-3/4 ISO7R m**
- **2813301300 Threaded ad. D22-1/2 ISO7R m**
- **2813311300 Threaded ad. D22-3/4 ISO7R m**
- **2813421300 Threaded ad. D28-1 ISO7R m**

- Working pressure range : 16 bar at -20 °C to ≤ +50 °C
- Material: Brass
- Free of Silicone

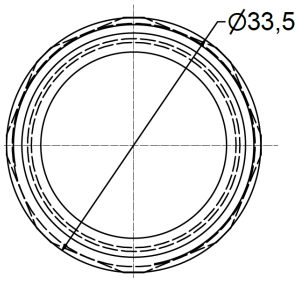

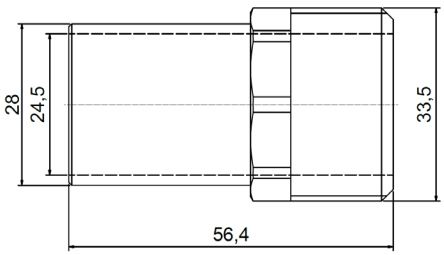

Ordering Information

Ordering Information	Weight KG	Dimension mm
2813101300	0,040	45x24x24
2813201300	0,050	48x24x24
2813211300	0,065	48x27x27
2813301300	0,068	52x24x24
2813311300	0,073	52x27x27
2813421300	0,125	57x33x33

Hanger bolt for pipe clamps

- **For dismantling the AIRnet Vario system**
- Ideal for hard-to-reach places

Specifications	
length	80 mm
Size	M8
Torx size	T25
Wrench size	22 mm
Material	steel
Wrench size	6 mm

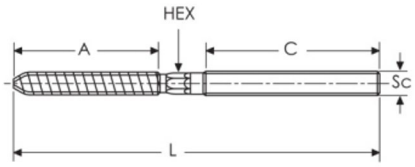

Ordering Information

Ordering Information	Weight KG	Dimension mm
2813402800	0,050	80x8x8

Disassembly pliers D 15

- **For dismantling the AIRnet Vario system**
- Ideal for hard-to-reach places

Ordering Information

Ordering Information	Weight KG	Dimension mm
2813102800	0,126	125x42x27

Disassembly pliers D 22

- **For dismantling the AIRnet Vario system**
- Ideal for hard-to-reach places

Ordering Information

Ordering Information	Weight KG	Dimension mm
2813302800	0,129	125x45x34

Disassembly pliers D 28

- **For dismantling the AIRnet Vario system**
- Ideal for hard-to-reach places

Ordering Information

Ordering Information	Weight KG	Dimension mm
2813402800	0,132	125x45x38

Disassembly clip D 15

- **For dismantling the AIRnet Vario system**

Ordering Information

Ordering Information	Weight KG	Dimension mm
2813112800	0,003	29x9x24

Disassembly clip D 18

- **For dismantling the AIRnet Vario system**

Ordering Information

Ordering Information	Weight KG	Dimension mm
2813222800	0,004	36x9x28

Disassembly clip D 22

- **For dismantling the AIRnet Vario system**

Ordering Information

Ordering Information	Weight KG	Dimension mm
2813332800	0,007	43x10x35

Disassembly clip D 28

- **For dismantling the AIRnet Vario system**

Ordering Information

Ordering Information	Weight KG	Dimension mm
2813442800	0,010	55x10x45

Marking and deburring tool

- **Universal tool for chamfering and deburring aluminum pipes**

- Also suitable for insertion depth marking
- For notching hard surfaces, e.g. V4A piping

Ordering Information

Ordering Information	Weight KG	Dimension mm
2813402800	0,070	100x60x34

Pipe cutter

- **2813034000 Universal tool for cutting aluminum aluminium and stainless steel pipes dia. 15-32 mm**
- **Also suitable for deburring the inner diameter**
- **Including deburring mandrel and spare cutting wheel**

Pipe cutter D32 cutting wheel

- **2813044000 1 spare blades for pipe cutter**

Ordering Information

Ordering Information	Weight KG	Dimension mm
2813004000	0,272	148x63x26
2813014000	0,006	18x7x18

Deburring tool D35

- **Universal tool for chamfering and deburring aluminum and polyamide pipes**
- **Also suitable for stainless steel pipes**

- For deburring the inside and outside diameter
- Particularly high quality thanks to precision knives
- For all diameters 8-35 mm

Ordering Information

Ordering Information	Weight KG	Dimension mm
2813054000	0,130	49x49x61

Deburring blade

- **For deburring the inner diameter of aluminium pipes**

- Blade can be changed easily at the push of a button
- Includes 1 spare blade, which is stowed in the handle
- Max. operating pressure 16 bar
- Free of silicone

Ordering Information

Ordering Information	Weight KG	Dimension mm
2813064000	0,100	150x30x30

Anti-friction agent

- **For easy installation of compressed air pipes**
- **Free of silicone**

Specifications

Volume	185 ml

Ordering Information

Ordering Information	Weight KG	Dimension mm
2813074000	0,230	71x81x71

Pipe sockets
15-22 mm

Innovative and flexible –
for greater economicefficiency

Install perfect compressed air outlets in the pipe system for each workplace – versatile pipe sockets are fully compatible with the Schneider airsystems pipe system and various attachment parts, and can be extended by fitting additional outlet components.

Socket Box 2x1/2

- **For installation in piping systems**

- Ideal to use as a terminal box
- The cover can be removed and used as a drilling template

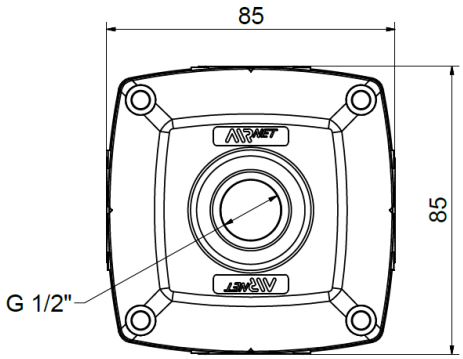

Specifications

Inlet Connection	1 x 1/2“ female BSP thread
Outlet Connection	1 x 1/2“ female BSP thread
Max. pressure	16 bar at -20°C - +50°C
Material	PA6 GF30
Layer material	Brass

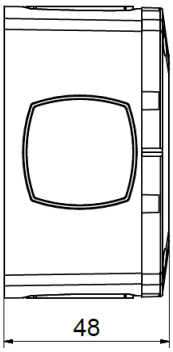

Ordering Information

Ordering Information	Weight KG	Dimension mm
2813002580	0,200	85x48x85

Socket Box 3x1/2

- **For installation in piping systems**

- Ideal to use as a distribution box
- The cover can be removed and used as a drilling template

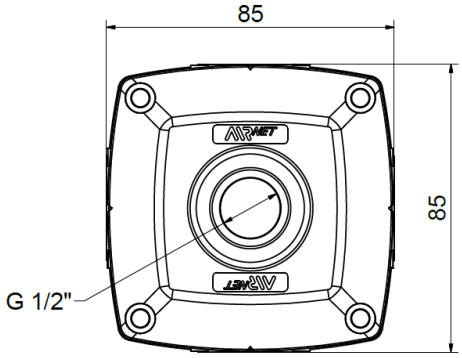

Specifications

Inlet Connection	2 x 1/2“ female BSP thread
Outlet Connection	1 x 1/2“ female BSP thread
Max. pressure	16 bar at -20°C - +50°C
Material	PA6 GF30
Layer material	Brass

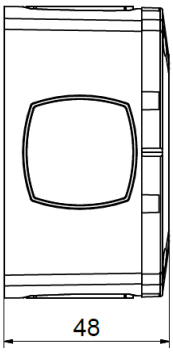

Ordering Information

Ordering Information	Weight KG	Dimension mm
2813002581	0,225	85x48x85

Socket Box 4x1/2

- **For installation in piping systems**

- Ideal to use as a distribution box
- The cover can be removed and used as a drilling template

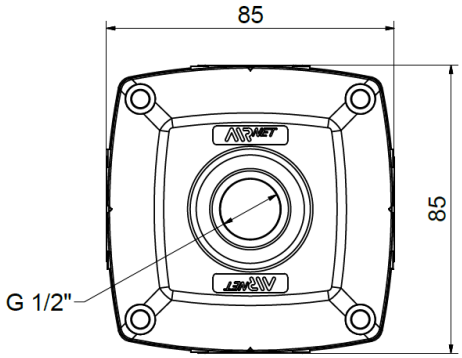

Specifications

Inlet Connection	3 x 1/2“ female BSP thread
Outlet Connection	1 x 1/2“ female BSP thread
Max. pressure	16 bar at -20°C - +50°C
Material	PA6 GF30
Layer material	Brass

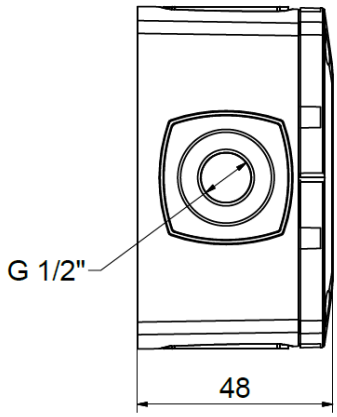

Ordering Information

Ordering Information	Weight KG	Dimension mm
2813002582	0,250	85x48x85

Socket Box 6x1/2

- **For installation in piping systems**

- Ideal to use as a distribution box
- The cover can be removed and used as a drilling template

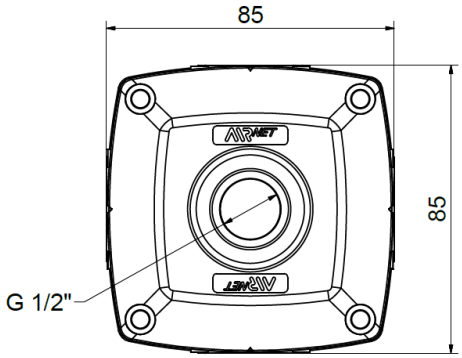

Specifications

Inlet Connection	4 x 1/2“ female BSP thread
Outlet Connection	2 x 1/2“ female BSP thread (second backside)
Max. pressure	16 bar at -20°C - +50°C
Material	PA6 GF30
Layer material	Brass

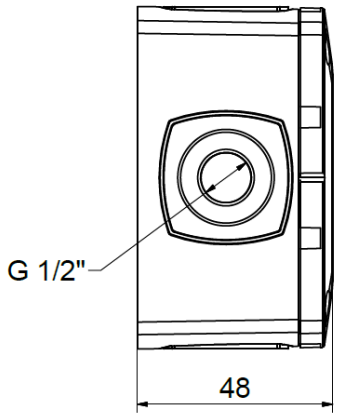

Ordering Information

Ordering Information	Weight KG	Dimension mm
2813002583	0,290	85x48x85

Socket Box Top 2x1/2

- **For installation in piping systems**
- **Mounted on a base box**

- Ideal to use as a terminal box
- Scope of delivery including screws and O-ring

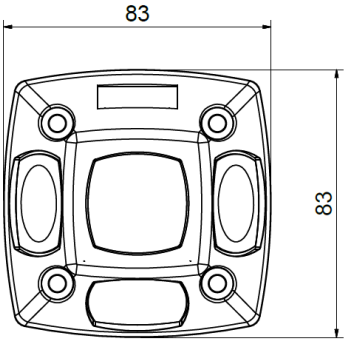

Specifications

Inlet Connection	1 x 1/2“ female BSP thread
Outlet Connection	2 x 1/2“ female BSP thread
Max. pressure	16 bar at -20°C - +50°C
Material	PA6 GF30
Layer material	Brass

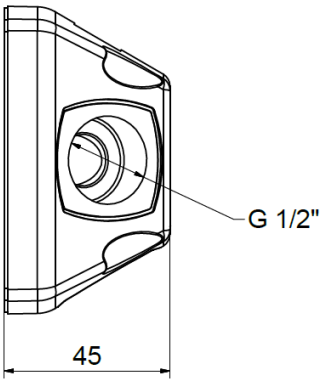

Ordering Information

Ordering Information	Weight KG	Dimension mm
2813002680	0,202	83x45x83

Hoses and workshop equipment

For a perfectly organised workplace

For private use and professional workshop applications – hard-wearing fabric hoses, flexible Super-Flex hoses or durable polyurethane hoses for every application. For optimal workplace organisation and ergonomic work – hose rewinders, power and air supply units and tractions.

SH PA-QRC-E-8bar 8-6/5m

- **With rotary quick-action coupling and plug nipple, ready for immediate use**
- **Bend protection at the spiral hose ends for an extended service life and constant air flow**
- **Particularly suitable for tractions due to high reset force**

- Max. operating pressure 8 bar at 20 °C

Specifications	
Operating pressure	0-8 bar
Hose outer diameter	8 mm
Hose inner diameter	6 mm
Hose length	5 m
Material of hose	PA
Connection inlet	PN Euro profile
Connection outlet	Quick release coupling Euro profile 7.2

Ordering Information

Ordering Information	Weight KG
2813 9400 00	0,36

SH PA-QRC-E-8bar 8-6/7,5m

- **With rotary quick-action coupling and plug nipple, ready for immediate use**
- **Bend protection at the spiral hose ends for an extended service life and constant air flow**
- **Particularly suitable for tractions due to high reset force**

- Max. operating pressure 8 bar at 20 °C

Specifications	
Operating pressure	0-8 bar
Hose outer diameter	8 mm
Hose inner diameter	6 mm
Hose length	7,5 m
Material of hose	PA
Connection inlet	PN Euro profile
Connection outlet	Quick release coupling Euro profile 7.2

Ordering Information

Ordering Information	Weight KG
2813 9400 01	0,46

SH PA-QRC-E-8bar 8-6/15m

- **With rotary quick-action coupling and plug nipple, ready for immediate use**
- **Bend protection at the spiral hose ends for an extended service life and constant air flow**
- **Particularly suitable for tractions due to high reset force**

- Max. operating pressure 8 bar at 20 °C

Specifications	
Operating pressure	0-8 bar
Hose outer diameter	8 mm
Hose inner diameter	6 mm
Hose length	15 m
Material of hose	PA
Connection inlet	PN Euro profile
Connection outlet	Quick release coupling Euro profile 7.2

Ordering Information

Ordering Information	Weight KG
2813 9400 02	0,80

SH PA-QRC-U-8bar 8-6/5m

- **With rotary quick-action coupling and plug nipple, ready for immediate use**
- **Bend protection at the spiral hose ends for an extended service life and constant air flow**
- **Particularly suitable for tractions due to high reset force**

- Max. operating pressure 8 bar at 20 °C

Specifications	
Operating pressure	0-8 bar
Hose outer diameter	8 mm
Hose inner diameter	6 mm
Hose length	5 m
Material of hose	PA
Connection inlet	PN Euro profile
Connection outlet	Quick release coupling Universal profile

Ordering Information

Ordering Information	Weight KG
2813 9400 04	0,36

SH PA-QRC-U-8bar 8-6/10m

- **With rotary quick-action coupling and plug nipple, ready for immediate use**
- **Bend protection at the spiral hose ends for an extended service life and constant air flow**
- **Particularly suitable for tractions due to high reset force**

- Max. operating pressure 8 bar at 20 °C

Specifications	
Operating pressure	0-8 bar
Hose outer diameter	8 mm
Hose inner diameter	6 mm
Hose length	10 m
Material of hose	PA
Connection inlet	PN Euro profile
Connection outlet	Quick release coupling Universal profile

Ordering Information

Ordering Information	Weight KG
2813 9400 05	0,46

SH PA-QRC-U-8bar 8-6/15m

- **With rotary quick-action coupling and plug nipple, ready for immediate use**
- **Bend protection at the spiral hose ends for an extended service life and constant air flow**
- **Particularly suitable for tractions due to high reset force**

- Max. operating pressure 8 bar at 20 °C

Specifications	
Operating pressure	0-8 bar
Hose outer diameter	8 mm
Hose inner diameter	6 mm
Hose length	15 m
Material of hose	PA
Connection inlet	PN Euro profile
Connection outlet	Quick release coupling Universal profile

Ordering Information

Ordering Information	Weight KG
2813 9400 06	0,80

SH PA-QRC-BJ-8bar 8-6/5m

- **With bayonet profile and plug nipple, ready for immediate use**

- Max. operating pressure 8 bar at 20 °C

Specifications	
Operating pressure	0-8 bar
Hose outer diameter	8 mm
Hose inner diameter	6 mm
Hose length	5 m
Material of hose	PA
Connection inlet	PN Euro profile
Connection outlet	Bayonet profile

Ordering Information

Ordering Information	Weight KG
2813 9400 07	0,33

SH PA-QRC-BJ-8bar 8-6/10m

- **With bayonet profile and plug nipple, ready for immediate use**

- Max. operating pressure 8 bar at 20 °C

Specifications	
Operating pressure	0-8 bar
Hose outer diameter	8 mm
Hose inner diameter	6 mm
Hose length	10 m
Material of hose	PA
Connection inlet	PN Euro profile
Connection outlet	Bayonet profile

Ordering Information

Ordering Information	Weight KG
2813 9400 08	0,43

SH PA-QRC-BJ-8bar 8-6/15m

- **With bayonet profile and plug nipple, ready for immediate use**

- Max. operating pressure 8 bar at 20 °C

Specifications	
Operating pressure	0-8 bar
Hose outer diameter	8 mm
Hose inner diameter	6 mm
Hose length	15 m
Material of hose	PA
Connection inlet	PN Euro profile
Connection outlet	Bayonet profile

Ordering Information

Ordering Information	Weight KG
2813 9400 09	0,77

SH PA-QRC-E-8bar 10-8/10m

- **With rotary quick-action coupling and plug nipple, ready for immediate use**
- **Bend protection at the spiral hose ends for an extended service life and constant air flow**
- **Particularly suitable for tractions due to high reset force**

- Max. operating pressure 8 bar at 20 °C

Specifications	
Operating pressure	0-8 bar
Hose outer diameter	10 mm
Hose inner diameter	8 mm
Hose length	10 m
Material of hose	PA
Connection inlet	PN Euro profile
Connection outlet	Quick release coupling Euro profile 7.2

Ordering Information

Ordering Information	Weight KG
2813 9400 03	0,68

SH PUR-QRC-E-8bar 10-6,5/6m

- **With rotary quick-action coupling and plug nipple, ready for immediate use**
- **Bend protection at the spiral hose ends for an extended service life and constant air flow**
- **Small winding diameter saves space**
- **Particularly abrasion-resistant and very resilient**
- **No remaining cross-section reductions upon bending**

- Connections with swivel joints
- Max. operating pressure 8 bar at 20 °C

Specifications	
Operating pressure	0-8 bar
Hose outer diameter	10 mm
Hose inner diameter	6,5 mm
Hose length	6 m
Material of hose	PUR
Connection inlet	PN Euro profile
Connection outlet	Quick release coupling Euro profile 7.2

Ordering Information

Ordering Information	Weight KG
2813 9400 10	0,80

SH PUR-QRC-E-8bar 10-6,5/7,5m

- **With rotary quick-action coupling and plug nipple, ready for immediate use**
- **Bend protection at the spiral hose ends for an extended service life and constant air flow**
- **Small winding diameter saves space**
- **Particularly abrasion-resistant and very resilient**
- **No remaining cross-section reductions upon bending**

- Connections with swivel joints
- Max. operating pressure 8 bar at 20 °C

Specifications	
Operating pressure	0-8 bar
Hose outer diameter	10 mm
Hose inner diameter	6,5 mm
Hose length	7,5 m
Material of hose	PUR
Connection inlet	PN Euro profile
Connection outlet	Quick release coupling Euro profile 7.2

Ordering Information

Ordering Information	Weight KG
2813 9400 11	0,85

SH PUR-Rp3/8-8bar 10-6,5/7,5m

- **Bend protection at the spiral hose ends for an extended service life and constant air flow**
- **Small winding diameter saves space**
- **Particularly abrasion-resistant and very resilient**
- **No remaining cross-section reductions upon bending**

- Connections with swivel joints
- Max. operating pressure 8 bar at 20 °C

Specifications

Operating pressure	0-8 bar
Hose outer diameter	10 mm
Hose inner diameter	6,5 mm
Hose length	7,5 m
Material of hose	PUR
Connection inlet	3/8” male
Connection outlet	3/8” male

Ordering Information

Ordering Information	Weight KG
2813 9400 14	0,70

SH PUR-QRC-E-8bar 12-8/6m

- **With rotary quick-action coupling and plug nipple, ready for immediate use**
- **Bend protection at the spiral hose ends for an extended service life and constant air flow**
- **Small winding diameter saves space**
- **Particularly abrasion-resistant and very resilient**
- **No remaining cross-section reductions upon bending**

- Connections with swivel joints
- Max. operating pressure 8 bar at 20 °C

Specifications	
Operating pressure	0-8 bar
Hose outer diameter	12 mm
Hose inner diameter	8 mm
Hose length	6 m
Material of hose	PUR
Connection inlet	PN Euro profile
Connection outlet	Quick release coupling Euro profile 7.2

Ordering Information

Ordering Information	Weight KG
2813 9400 12	0,98

SH PUR-QRC-E-8bar 12-8/7,5m

- **With rotary quick-action coupling and plug nipple, ready for immediate use**
- **Bend protection at the spiral hose ends for an extended service life and constant air flow**
- **Small winding diameter saves space**
- **Particularly abrasion-resistant and very resilient**
- **No remaining cross-section reductions upon bending**

- Connections with swivel joints
- Max. operating pressure 8 bar at 20 °C

Specifications	
Operating pressure	0-8 bar
Hose outer diameter	12 mm
Hose inner diameter	8 mm
Hose length	7,5 m
Material of hose	PUR
Connection inlet	PN Euro profile
Connection outlet	Quick release coupling Euro profile 7.2

Ordering Information

Ordering Information	Weight KG
2813 9400 13	1,00

SH PUR-8bar 12-8/6m

- **Bend protection at the spiral hose ends for an extended service life and constant air flow**
- **Small winding diameter saves space**
- **Particularly abrasion-resistant and very resilient**
- **No remaining cross-section reductions upon bending**

- Connections with swivel joints
- Max. operating pressure 8 bar at 20 °C

Specifications

Operating pressure	0-8 bar
Hose outer diameter	12 mm
Hose inner diameter	8 mm
Hose length	6 m
Material of hose	PUR
Connection inlet	3/8” male
Connection outlet	3/8” male

Ordering Information

Ordering Information	Weight KG
2813 9400 15	0,90

SH PUR-15bar 16-10/5m

- **Bend protection at the spiral hose ends for an extended service life and constant air flow**
- **Small winding diameter saves space**
- **Particularly abrasion-resistant and very resilient**
- **No remaining cross-section reductions upon bending**

- Connections with swivel joints
- Max. operating pressure 15 bar at 20 °C

Specifications	
Operating pressure	0-15 bar
Hose outer diameter	16 mm
Hose inner diameter	10 mm
Hose length	5 m
Material of hose	PUR
Connection inlet	PN Euro profile
Connection outlet	Quick release coupling Universal profile

Ordering Information

Ordering Information	Weight KG
2813 9400 16	0,82

SH PUR-15bar 16-10/10m

- **Bend protection at the spiral hose ends for an extended service life and constant air flow**
- **Small winding diameter saves space**
- **Particularly abrasion-resistant and very resilient**
- **No remaining cross-section reductions upon bending**

- Connections with swivel joints
- Max. operating pressure 15 bar at 20 °C

Specifications	
Operating pressure	0-15 bar
Hose outer diameter	16 mm
Hose inner diameter	10 mm
Hose length	10 m
Material of hose	PUR
Connection inlet	PN Euro profile
Connection outlet	Quick release coupling Universal profile

Ordering Information

Ordering Information	Weight KG
2813 9400 16	1,62

H PVC-QRC-E-15bar 11-6/5m

- **Particularly resistant against compressed air containing oil**
- Max. operating pressure 15 bar at 20 °C

Specifications	
Operating pressure	0-15 bar
Hose outer diameter	11 mm
Hose inner diameter	6 mm
Hose length	5 m
Material of hose	PVC
Connection inlet	PN Euro profile
Connection outlet	Quick release coupling Euro profile 7.2

Ordering Information

Ordering Information	Weight KG
2813 9300 00	0,52

H PVC-QRC-U-15bar 11-6/5m

- **Particularly resistant against compressed air containing oil**
- Max. operating pressure 15 bar at 20 °C

Specifications	
Operating pressure	0-15 bar
Hose outer diameter	11 mm
Hose inner diameter	6 mm
Hose length	5 m
Material of hose	PVC
Connection inlet	PN Euro profile
Connection outlet	Quick release coupling Universal profile

Ordering Information

Ordering Information	Weight KG
2813 9300 05	0,52

H PVC-QRC-E-15bar 11-6/10m

- **Particularly resistant against compressed air containing oil**
- Max. operating pressure 15 bar at 20 °C

Specifications	
Operating pressure	0-15 bar
Hose outer diameter	11 mm
Hose inner diameter	6 mm
Hose length	10 m
Material of hose	PVC
Connection inlet	PN Euro profile
Connection outlet	Quick release coupling Euro profile 7.2

Ordering Information

Ordering Information	Weight KG
2813 9300 01	0,96

H PVC-QRC-U-15bar 11-6/10m

- **Particularly resistant against compressed air containing oil**
- Max. operating pressure 15 bar at 20 °C

Specifications	
Operating pressure	0-15 bar
Hose outer diameter	11 mm
Hose inner diameter	6 mm
Hose length	10 m
Material of hose	PVC
Connection inlet	PN Euro profile
Connection outlet	Quick release coupling Universal profile

Ordering Information

Ordering Information	Weight KG
2813 9300 06	0,96

H PVC-QRC-E-15bar 11-6/25m

- **Particularly resistant against compressed air containing oil**
- Max. operating pressure 15 bar at 20 °C

Specifications	
Operating pressure	0-15 bar
Hose outer diameter	11 mm
Hose inner diameter	6 mm
Hose length	25 m
Material of hose	PVC
Connection inlet	-
Connection outlet	-

Ordering Information

Ordering Information	Weight KG
2813 9300 15	2,10

H PVC-QRC-E-15bar 11-6/50m

- **Particularly resistant against compressed air containing oil**
- Max. operating pressure 15 bar at 20 °C

Specifications	
Operating pressure	0-15 bar
Hose outer diameter	11 mm
Hose inner diameter	6 mm
Hose length	50 m
Material of hose	PVC
Connection inlet	-
Connection outlet	-

Ordering Information

Ordering Information	Weight KG
2813 9300 16	4,30

H PVC-QRC-E-15bar 15-9/5m

- **Particularly resistant against compressed air containing oil**
- Max. operating pressure 15 bar at 20 °C

Specifications	
Operating pressure	0-15 bar
Hose outer diameter	15 mm
Hose inner diameter	9 mm
Hose length	5 m
Material of hose	PVC
Connection inlet	PN Euro profile
Connection outlet	Quick release coupling Euro profile 7.2

Ordering Information

Ordering Information	Weight KG
2813 9300 02	0,83

H PVC-QRC-U-15bar 15-9/5m

- **Particularly resistant against compressed air containing oil**
- Max. operating pressure 15 bar at 20 °C

Specifications	
Operating pressure	0-15 bar
Hose outer diameter	15 mm
Hose inner diameter	9 mm
Hose length	5 m
Material of hose	PVC
Connection inlet	PN Euro profile
Connection outlet	Quick release coupling Universal profile

Ordering Information

Ordering Information	Weight KG
2813 9300 07	0,83

H PVC-QRC-E-15bar 15-9/10m

- **Particularly resistant against compressed air containing oil**
- Max. operating pressure 15 bar at 20 °C

Specifications	
Operating pressure	0-15 bar
Hose outer diameter	15 mm
Hose inner diameter	9 mm
Hose length	10 m
Material of hose	PVC
Connection inlet	PN Euro profile
Connection outlet	Quick release coupling Euro profile 7.2

Ordering Information

Ordering Information	Weight KG
2813 9300 03	1,49

H PVC-QRC-U-15bar 15-9/10m

- **Particularly resistant against compressed air containing oil**
- Max. operating pressure 15 bar at 20 °C

Specifications	
Operating pressure	0-15 bar
Hose outer diameter	15 mm
Hose inner diameter	9 mm
Hose length	10 m
Material of hose	PVC
Connection inlet	PN Euro profile
Connection outlet	Quick release coupling Universal profile

Ordering Information

Ordering Information	Weight KG
2813 9300 08	1,49

H PVC-15bar 15-9/25m

- **Particularly resistant against compressed air containing oil**
- Max. operating pressure 15 bar at 20 °C

Specifications	
Operating pressure	0-15 bar
Hose outer diameter	15 mm
Hose inner diameter	9 mm
Hose length	25 m
Material of hose	PVC
Connection inlet	-
Connection outlet	-

Ordering Information

Ordering Information	Weight KG
2813 9300 17	3,40

H PVC-15bar 15-9/50m

- **Particularly resistant against compressed air containing oil**

- Max. operating pressure 15 bar at 20 °C

Specifications	
Operating pressure	0-15 bar
Hose outer diameter	15 mm
Hose inner diameter	9 mm
Hose length	50 m
Material of hose	PVC
Connection inlet	-
Connection outlet	-

Ordering Information

Ordering Information	Weight KG
2813 9300 18	7,2

H PVC-QRC-E-15bar 18-13/5m

- **Particularly resistant against compressed air containing oil**
- Max. operating pressure 15 bar at 20 °C

Specifications	
Operating pressure	0-15 bar
Hose outer diameter	18 mm
Hose inner diameter	13 mm
Hose length	10 m
Material of hose	PVC
Connection inlet	PN Euro profile
Connection outlet	Quick release coupling Euro profile 7.2

Ordering Information

Ordering Information	Weight KG
2813 9300 04	2,00

H PVC-QRC-U-15bar 18-13/10m

- **Particularly resistant against compressed air containing oil**
- Max. operating pressure 15 bar at 20 °C

Specifications	
Operating pressure	0-15 bar
Hose outer diameter	18 mm
Hose inner diameter	13 mm
Hose length	10 m
Material of hose	PVC
Connection inlet	PN Euro profile
Connection outlet	Quick release coupling Universal profile

Ordering Information

Ordering Information	Weight KG
2813 9300 09	2,00

H PVC-15bar 18-13/25m

- **Particularly resistant against compressed air containing oil**
- Max. operating pressure 15 bar at 20 °C

Specifications	
Operating pressure	0-15 bar
Hose outer diameter	18 mm
Hose inner diameter	13 mm
Hose length	25 m
Material of hose	PVC
Connection inlet	-
Connection outlet	-

Ordering Information

Ordering Information	Weight KG
2813 9300 19	4,80

H PVC-15bar 18-13/50m

- **Particularly resistant against compressed air containing oil**
- Max. operating pressure 15 bar at 20 °C

Specifications	
Operating pressure	0-15 bar
Hose outer diameter	18 mm
Hose inner diameter	13 mm
Hose length	50 m
Material of hose	PVC
Connection inlet	-
Connection outlet	-

Ordering Information

Ordering Information	Weight KG
2813 9300 20	9,40

H PVC-QRC-E-OR-15bar 15-9/10m

- **Extremely resistant against compressed air containing oil**
- Max. operating pressure 15 bar at 20 °C

Specifications	
Operating pressure	0-15 bar
Hose outer diameter	15 mm
Hose inner diameter	9 mm
Hose length	10 m
Material of hose	PVC
Connection inlet	PN Euro profile
Connection outlet	Quick release coupling Euro profile 7.2

Ordering Information

Ordering Information	Weight KG
2813 9300 10	1,43

H PVC-OR-15bar 15-9/25m

- **Extremely resistant against compressed air containing oil**

- Max. operating pressure 15 bar at 20 °C

Specifications	
Operating pressure	0-15 bar
Hose outer diameter	15 mm
Hose inner diameter	9 mm
Hose length	25 m
Material of hose	PVC
Connection inlet	-
Connection outlet	-

Ordering Information

Ordering Information	Weight KG
2813 9300 21	3,40

H PVC-QRC-E-SF-15bar 11-6/5m

- **Reinforced external material for greater resistance to ageing and protection against compressed air containing oil**
- **Extremely flexible, even at low temperatures**

- PVC hose with fabric inlay
- Max. operating pressure 15 bar at 20 °C

Specifications	
Operating pressure	0-15 bar
Hose outer diameter	11 mm
Hose inner diameter	6,3 mm
Hose length	5 m
Material of hose	PVC
Connection inlet	PN Euro profile
Connection outlet	Quick release coupling Euro profile 7.2

Ordering Information

Ordering Information	Weight KG
2813 9300 11	0,52

H PVC-QRC-E-SF-15bar 11-6/10m

- **Reinforced external material for greater resistance to ageing and protection against compressed air containing oil**
- **Extremely flexible, even at low temperatures**

- PVC hose with fabric inlay
- Max. operating pressure 15 bar at 20 °C

Specifications	
Operating pressure	0-15 bar
Hose outer diameter	11 mm
Hose inner diameter	6,3 mm
Hose length	10 m
Material of hose	PVC
Connection inlet	PN Euro profile
Connection outlet	Quick release coupling Euro profile 7.2

Ordering Information

Ordering Information	Weight KG
2813 9300 12	0,87

H PVC-SF-15bar 11-6/25m

- **Reinforced external material for greater resistance to ageing and protection against compressed air containing oil**
- **Extremely flexible, even at low temperatures**

- PVC hose with fabric inlay
- Max. operating pressure 15 bar at 20 °C

Specifications	
Operating pressure	0-15 bar
Hose outer diameter	11 mm
Hose inner diameter	6,3 mm
Hose length	25 m
Material of hose	PVC
Connection inlet	-
Connection outlet	-

Ordering Information

Ordering Information	Weight KG
2813 9300 22	1,90

H PVC-SF-15bar 11-6/50m

- **Reinforced external material for greater resistance to ageing and protection against compressed air containing oil**
- **Extremely flexible, even at low temperatures**

- PVC hose with fabric inlay
- Max. operating pressure 15 bar at 20 °C

Specifications	
Operating pressure	0-15 bar
Hose outer diameter	11 mm
Hose inner diameter	6,3 mm
Hose length	50 m
Material of hose	PVC
Connection inlet	-
Connection outlet	-

Ordering Information

Ordering Information	Weight KG
2813 9300 23	4,10

H PVC-QRC-E-SF-15bar 15-10/5m

- **Reinforced external material for greater resistance to ageing and protection against compressed air containing oil**
- **Extremely flexible, even at low temperatures**

- PVC hose with fabric inlay
- Max. operating pressure 15 bar at 20 °C

Specifications	
Operating pressure	0-15 bar
Hose outer diameter	15,5 mm
Hose inner diameter	10 mm
Hose length	5 m
Material of hose	PVC
Connection inlet	PN Euro profile
Connection outlet	Quick release coupling Euro profile 7.2

Ordering Information

Ordering Information	Weight KG
2813 9300 13	0,79

H PVC-QRC-E-SF-15bar 15-10/10m

- **Reinforced external material for greater resistance to ageing and protection against compressed air containing oil**
- **Extremely flexible, even at low temperatures**

- PVC hose with fabric inlay
- Max. operating pressure 15 bar at 20 °C

Specifications	
Operating pressure	0-15 bar
Hose outer diameter	15,5 mm
Hose inner diameter	10 mm
Hose length	10 m
Material of hose	PVC
Connection inlet	PN Euro profile
Connection outlet	Quick release coupling Euro profile 7.2

Ordering Information

Ordering Information	Weight KG
2813 9300 14	1,44

H PVC-SF-15bar 15-10/25m

- **Reinforced external material for greater resistance to ageing and protection against compressed air containing oil**
- **Extremely flexible, even at low temperatures**

- PVC hose with fabric inlay
- Max. operating pressure 15 bar at 20 °C

Specifications	
Operating pressure	0-15 bar
Hose outer diameter	15,5 mm
Hose inner diameter	10 mm
Hose length	25 m
Material of hose	PVC
Connection inlet	-
Connection outlet	-

Ordering Information

Ordering Information	Weight KG
2813 9300 24	3,60

H PVC-SF-15bar 15-10/50m

- **Reinforced external material for greater resistance to ageing and protection against compressed air containing oil**
- **Extremely flexible, even at low temperatures**

- PVC hose with fabric inlay
- Max. operating pressure 15 bar at 20 °C

Specifications	
Operating pressure	0-15 bar
Hose outer diameter	15,5 mm
Hose inner diameter	10 mm
Hose length	50 m
Material of hose	PVC
Connection inlet	-
Connection outlet	-

Ordering Information

Ordering Information	Weight KG
2813 9300 25	6,60

H PVC-SF-15bar 19-13/25m

- **Reinforced external material for greater resistance to ageing and protection against compressed air containing oil**
- **Extremely flexible, even at low temperatures**

- PVC hose with fabric inlay
- Max. operating pressure 15 bar at 20 °C

Specifications	
Operating pressure	0-15 bar
Hose outer diameter	19 mm
Hose inner diameter	12,7 mm
Hose length	25 m
Material of hose	PVC
Connection inlet	-
Connection outlet	-

Ordering Information

Ordering Information	Weight KG
2813 9300 26	4,60

H PVC-SF-15bar 19-13/50m

- **Reinforced external material for greater resistance to ageing and protection against compressed air containing oil**
- **Extremely flexible, even at low temperatures**

- PVC hose with fabric inlay
- Max. operating pressure 15 bar at 20 °C

Specifications	
Operating pressure	0-15 bar
Hose outer diameter	19 mm
Hose inner diameter	12,7 mm
Hose length	50 m
Material of hose	PVC
Connection inlet	-
Connection outlet	-

Ordering Information

Ordering Information	Weight KG
2813 9300 27	9,40

H PVC-SF-15bar 27-19/25m

- **Reinforced external material for greater resistance to ageing and protection against compressed air containing oil**
- **Extremely flexible, even at low temperatures**

- PVC hose with fabric inlay
- Max. operating pressure 15 bar at 20 °C

Specifications	
Operating pressure	0-15 bar
Hose outer diameter	27 mm
Hose inner diameter	19 mm
Hose length	25 m
Material of hose	PVC
Connection inlet	-
Connection outlet	-

Ordering Information

Ordering Information	Weight KG
2813 9300 28	9,00

H PVC-SF-15bar 27-19/50m

- **Reinforced external material for greater resistance to ageing and protection against compressed air containing oil**
- **Extremely flexible, even at low temperatures**

- PVC hose with fabric inlay
- Max. operating pressure 15 bar at 20 °C

Specifications	
Operating pressure	0-15 bar
Hose outer diameter	27 mm
Hose inner diameter	19 mm
Hose length	50 m
Material of hose	PVC
Connection inlet	-
Connection outlet	-

Ordering Information

Ordering Information	Weight KG
2813 9300 29	18,0

H PVC-SF-40bar 16-10/50m

- **High-pressure version for pressure up to 40 bar**
- **Particularly suitable for connecting pneumatic tools outdoors**
- **Extremely flexible, even at low temperatures**
- **For temperature range from -15 °C to +60 °C**

- PVC hose with reinforced polyester threads, smooth hose core and UV-resistant outer lining
- Max. operating pressure 40 bar at 20 °C

Specifications	
Operating pressure	0-40 bar
Hose outer diameter	16 mm
Hose inner diameter	9 mm
Hose length	50 m
Material of hose	PVC
Connection inlet	-
Connection outlet	-

Ordering Information

Ordering Information	Weight KG
2813 9300 30	7,80

H PVC-SF-40bar 21-13/50m

- **High-pressure version for pressure up to 40 bar**
- **Particularly suitable for connecting pneumatic tools outdoors**
- **Extremely flexible, even at low temperatures**
- **For temperature range from -15 °C to +60 °C**

- PVC hose with reinforced polyester threads, smooth hose core and UV-resistant outer lining
- Max. operating pressure 40 bar at 20 °C

Specifications	
Operating pressure	0-40 bar
Hose outer diameter	21 mm
Hose inner diameter	13 mm
Hose length	50 m
Material of hose	PVC
Connection inlet	-
Connection outlet	-

Ordering Information

Ordering Information	Weight KG
2813 9300 31	10,30

EQ SST-0,4-1,0kg

- **For all types of portable devices and tools**
- **Fully fitted with safety cable, terminal block and snap hook**
- **High degree of flexibility because the spring tension on the housing can be used to set and adjust the required load capacity**

- Compact, with robust Aluminium housing
- Rubber buffer at the end

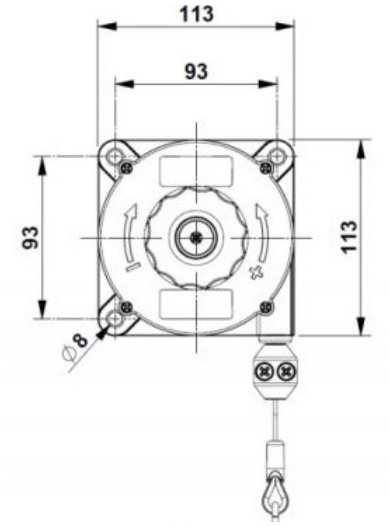

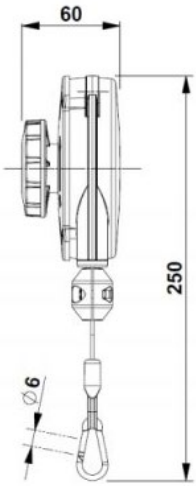

Specifications

Carrying power min.	0,4 kg
Carrying power max.	1,0 kg
Stroke length	1,6 m
Cable dia.	2 mm
Dimension	113x60x250 mm

Ordering Information

Ordering Information	Weight KG
2813 9600 00	0,63

EQ SST-1,0-2,0kg

- **For all types of portable devices and tools**
- **Fully fitted with safety cable, terminal block and snap hook**
- **High degree of flexibility because the spring tension on the housing can be used to set and adjust the required load capacity**

- Compact, with robust Aluminium housing
- Rubber buffer at the end

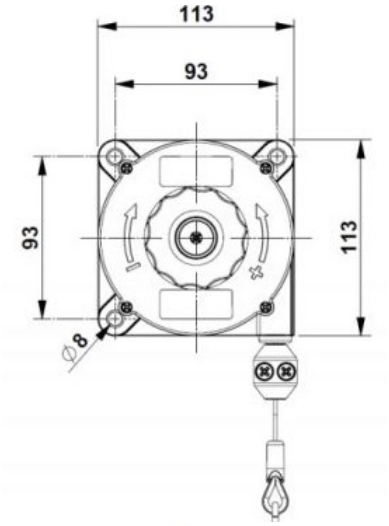

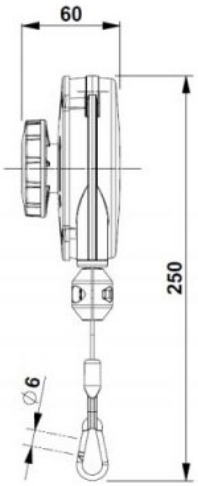

Specifications

Carrying power min.	1,0 kg
Carrying power max.	2,0 kg
Stroke length	1,6 m
Cable dia.	2 mm
Dimension	113x60x250 mm

Ordering Information

Ordering Information	Weight KG
2813 9600 01	0,67

EQ SST-2,0-3,0kg

- **For all types of portable devices and tools**
- **Fully fitted with safety cable, terminal block and snap hook**
- **High degree of flexibility because the spring tension on the housing can be used to set and adjust the required load capacity**

- Compact, with robust Aluminium housing
- Rubber buffer at the end

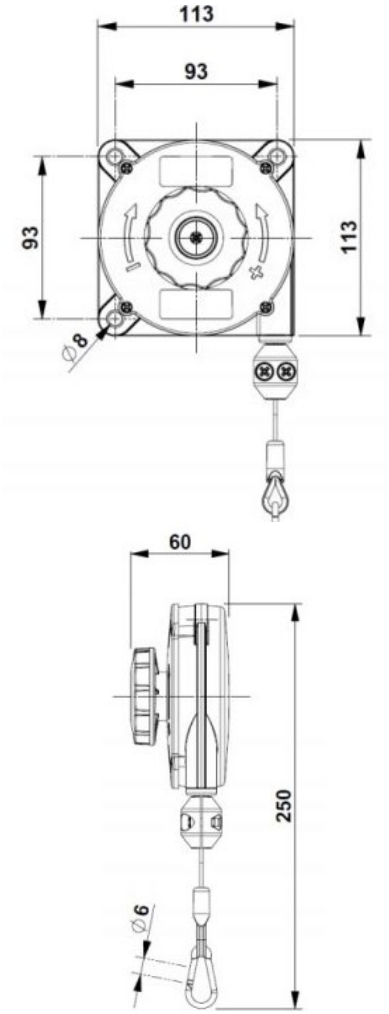

Specifications

Carrying power min.	2,0 kg
Carrying power max.	3,0 kg
Stroke length	1,6 m
Cable dia.	2 mm
Dimension	113x60x250 mm

Ordering Information

Ordering Information	Weight KG
2813 9600 02	0,79

EQ SST-2,0-4,0kg

- **For all types of portable devices and tools**
- **Fully fitted with safety cable, terminal block and snap hook**
- **High degree of flexibility because the spring tension on the housing can be used to set and adjust the required load capacity**

- Compact, with robust Aluminium housing
- Rubber buffer at the end

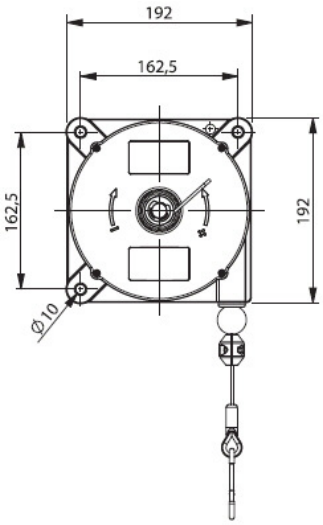

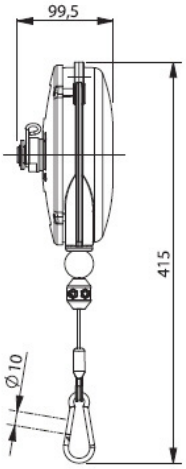

Specifications

Carrying power min.	2,0 kg
Carrying power max.	4,0 kg
Stroke length	2,5 m
Cable dia.	2,5 mm
Dimension	192x100x415 mm

Ordering Information

Ordering Information	Weight KG
2813 9600 03	2,85

EQ SST-4,0-6,0kg

- **For all types of portable devices and tools**
- **Fully fitted with safety cable, terminal block and snap hook**
- **High degree of flexibility because the spring tension on the housing can be used to set and adjust the required load capacity**

- Compact, with robust Aluminium housing
- Rubber buffer at the end

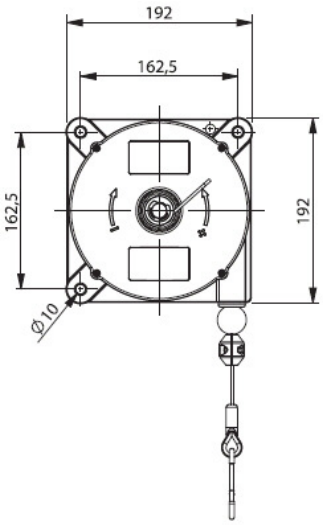

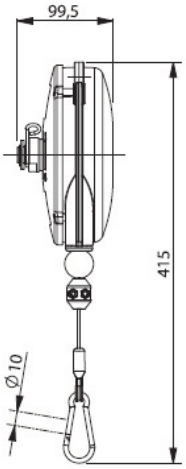

Specifications

Carrying power min.	4,0 kg
Carrying power max.	6,0 kg
Stroke length	2,5 m
Cable dia.	2,5 mm
Dimension	192x100x415 mm

Ordering Information

Ordering Information	Weight KG
2813 9600 04	3,00

EQ SST-6,0-8,0kg

- **For all types of portable devices and tools**
- **Fully fitted with safety cable, terminal block and snap hook**
- **High degree of flexibility because the spring tension on the housing can be used to set and adjust the required load capacity**

- Compact, with robust Aluminium housing
- Rubber buffer at the end

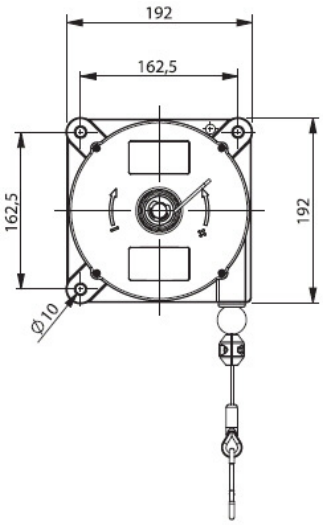

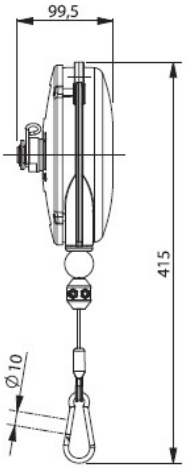

Specifications

Carrying power min.	6,0 kg
Carrying power max.	8,0 kg
Stroke length	2,5 m
Cable dia.	2,5 mm
Dimension	192x100x415 mm

Ordering Information

Ordering Information	Weight KG
2813 9600 05	3,10

HR PVC-QRC-U-A-15bar 12-8/10m

- **Fully fitted with quick-action coupling and long connection hose with plug nipple, ready to connect**
- **Flexible use with large swivel range**
- **Wall mounting**

- Automatic hose reel
- Outer Material ABS
- Wall mounting rotatable bracket

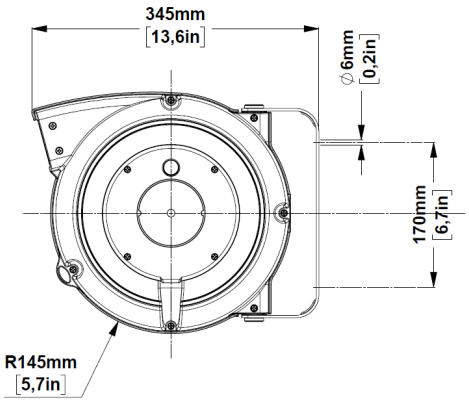

Specifications

Operating pressure	0-15 bar
Hose outer diameter	12 mm
Hose inner diameter	8 mm
Hose length	10 m
Material of hose	PVC
Length of hose connection	1,5 m
Connection inlet	PN Euro profile
Connection outlet	Quick release coupling Universal profile

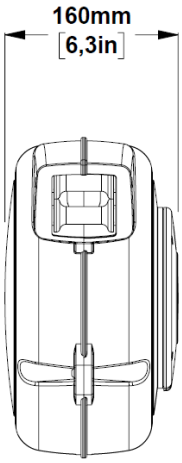

Ordering Information

Ordering Information	Weight KG	Dimension mm
2813950004	4,00	345x290x160

HR PVC-QRC-U-A-15bar 12-8/15m

- **Fully fitted with quick-action coupling and long connection hose with plug nipple, ready to connect**
- **Flexible use with large swivel range**
- **Wall mounting**

- Automatic hose reel
- Outer Material ABS
- Wall mounting rotatable bracket

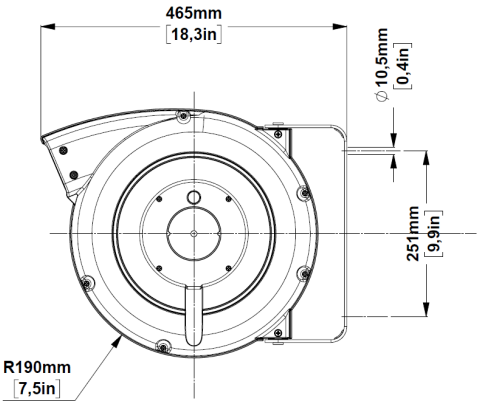

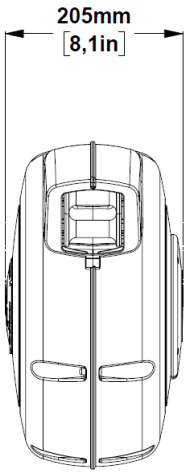

Specifications

Operating pressure	0-15 bar
Hose outer diameter	12 mm
Hose inner diameter	8 mm
Hose length	15 m
Material of hose	PVC
Length of hose connection	1,0 m
Temperature range	-5°C - +50°C
Connection inlet	PN Euro profile
Connection outlet	Quick release coupling Universal profile

Ordering Information

Ordering Information	Weight KG	Dimension mm
2813950005	7,30	470x400x205

HR PVC-QRC-U-A-15bar 14-10/15m

- **Fully fitted with quick-action coupling and long connection hose with plug nipple, ready to connect**
- **Flexible use with large swivel range**
- **Wall mounting**

- Automatic hose reel
- Outer Material ABS
- Wall mounting rotatable bracket

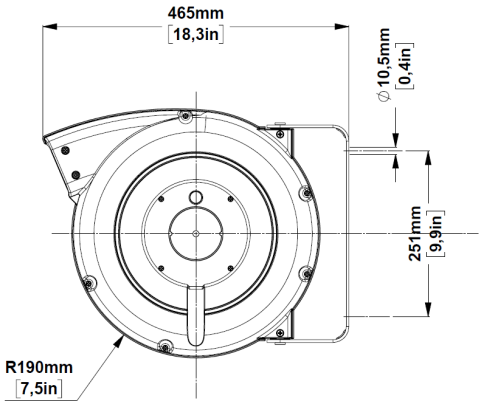

Specifications

Operating pressure	0-15 bar
Hose outer diameter	14 mm
Hose inner diameter	10 mm
Hose length	15 m
Material of hose	PVC
Length of hose connection	1,0 m
Connection inlet	PN Euro profile
Connection outlet	Quick release coupling Universal profile

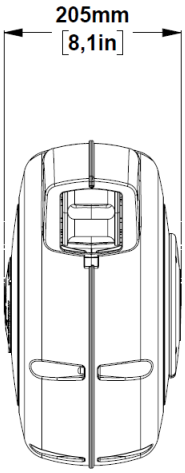

Ordering Information

Ordering Information	Weight KG	Dimension mm
2813950006	8,80	465x400x205

HR PVC-QRC-U-A-15bar 18-13/15m

- **Fully fitted with quick-action coupling and long connection hose with plug nipple, ready to connect**
- **Flexible use with large swivel range**
- **Wall mounting**

- Automatic hose reel
- Outer Material ABS
- Wall mounting rotatable bracket

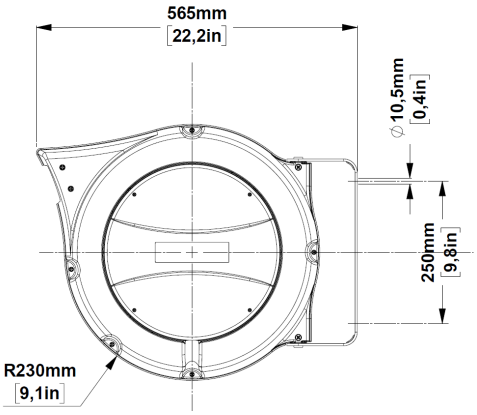

Specifications	
Operating pressure	0-15 bar
Hose outer diameter	17,5 mm
Hose inner diameter	12,5 mm
Hose length	15 m
Material of hose	PVC
Length of hose connection	1,5 m
Connection inlet	PN Euro profile
Connection outlet	Quick release coupling Universal profile

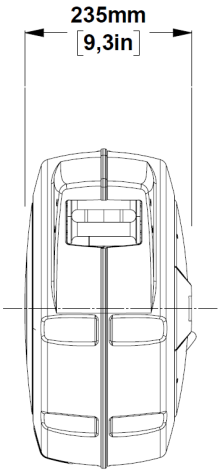

Ordering Information

Ordering Information	Weight KG	Dimension mm
2813950007	10,50	565x460x235

Connecting & joining technology

User-friendly and safe

For all connections on tools, hoses and machines – from the simple nipple to the more complex safety quick-action coupling.

C QRC-S-E-1/4"m

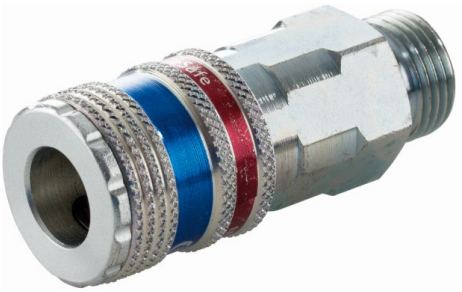

- **Safe working because the hose is not ejected when disconnected (whiplash effect), DIN EN ISO 4414 and DIN EN 983**
- **Hardened galvanized steel for an extended service life**
- **Low coupling force for easy coupling**

- European standard profile with nominal width of 7.6
- For extremely high air flow rate
- Max. operating pressure 16 bar
- Free of silicone

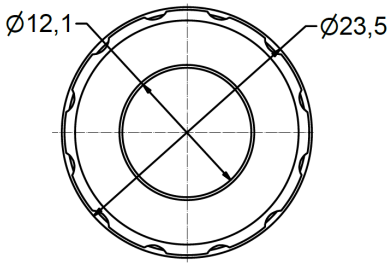

Specifications

Inlet Connection	1/4“ male BSP thread
Working pressure	0-16 bar
Max. Pressure	35 bar
Wrench size	22 mm
Nominal dia.	7,6 mm
Flow rate 6 bar European	2.250 l/min

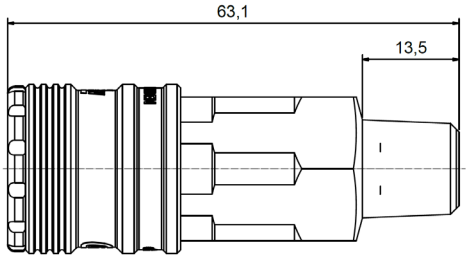

Ordering Information

Ordering Information	Weight KG	Dimension mm
2813 9100 18	0,089	58x25x25

C QRC-S-E-1/2"m

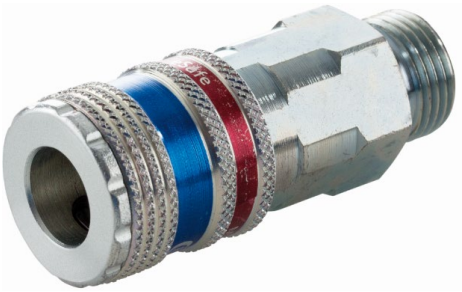

- **Safe working because the hose is not ejected when disconnected (whiplash effect), DIN EN ISO 4414 and DIN EN 983**
- **Hardened galvanized steel for an extended service life**
- **Low coupling force for easy coupling**

- European standard profile with nominal width of 7.6
- For extremely high air flow rate
- Max. operating pressure 16 bar
- Free of silicone

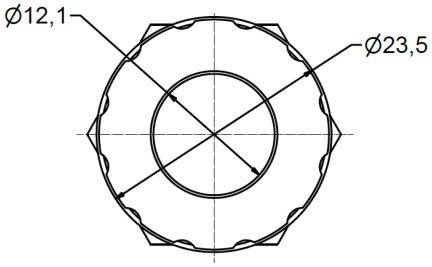

Specifications

Inlet Connection	1/2“ male BSP thread
Working pressure	0-16 bar
Max. Pressure	35 bar
Wrench size	22 mm
Nominal dia.	7,6 mm
Flow rate 6 bar European	2.250 l/min

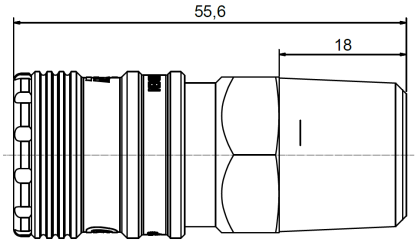

Ordering Information

Ordering Information	Weight KG	Dimension mm
2813 9100 20	0,103	58x25x25

C QRC-S-E-1/4“f

- **Safe working because the hose is not ejected when disconnected (whiplash effect), DIN EN ISO 4414 and DIN EN 983**
- **Hardened galvanized steel for an extended service life**
- **Low coupling force for easy coupling**

- European standard profile with nominal width of 7.6
- For extremely high air flow rate
- Max. operating pressure 16 bar
- Free of silicone

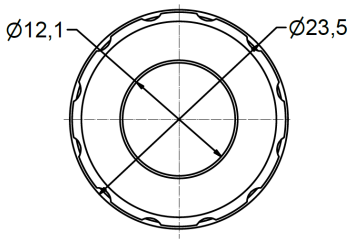

Specifications

Inlet Connection	1/4“ female BSP thread
Working pressure	0-16 bar
Max. Pressure	35 bar
Wrench size	22 mm
Nominal dia.	7,6 mm
Flow rate 6 bar European	2.250 l/min
Dimension	64x25x25

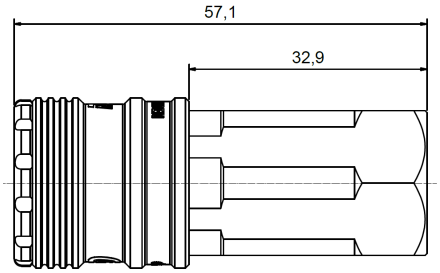

Ordering Information

Ordering Information	Weight KG	Dimension mm
2813 9100 21	0,119	64x25x25

C QRC-S-E-3/8“f

- **Safe working because the hose is not ejected when disconnected (whiplash effect), DIN EN ISO 4414 and DIN EN 983**
- **Hardened galvanized steel for an extended service life**
- **Low coupling force for easy coupling**

- European standard profile with nominal width of 7.6
- For extremely high air flow rate
- Max. operating pressure 16 bar
- Free of silicone

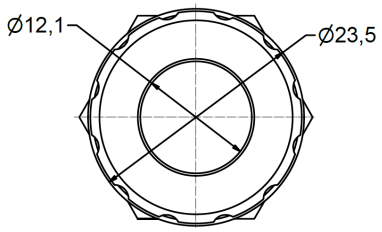

Specifications

Inlet Connection	3/8“ female BSP thread
Working pressure	0-16 bar
Max. Pressure	35 bar
Wrench size	22 mm
Nominal dia.	7,6 mm
Flow rate 6 bar European	2.250 l/min

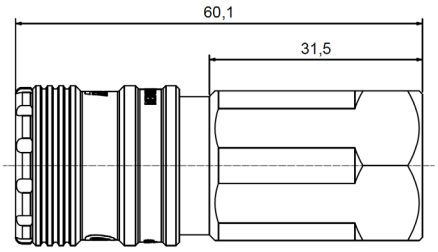

Ordering Information

Ordering Information	Weight KG	Dimension mm
2813 9100 22	0,112	64x25x25

C QRC-S-E-1/2“f

- **Safe working because the hose is not ejected when disconnected (whiplash effect), DIN EN ISO 4414 and DIN EN 983**
- **Hardened galvanized steel for an extended service life**
- **Low coupling force for easy coupling**

- European standard profile with nominal width of 7.6
- For extremely high air flow rate
- Max. operating pressure 16 bar
- Free of silicone

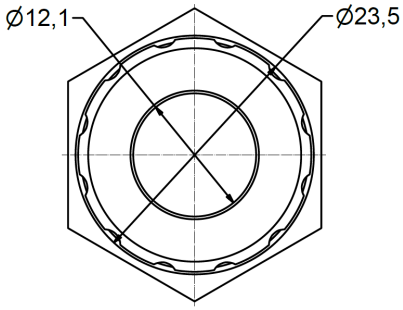

Specifications

Inlet Connection	1/2“ female BSP thread
Working pressure	0-16 bar
Max. Pressure	35 bar
Wrench size	22 mm
Nominal dia.	7,6 mm
Flow rate 6 bar European	2.250 l/min

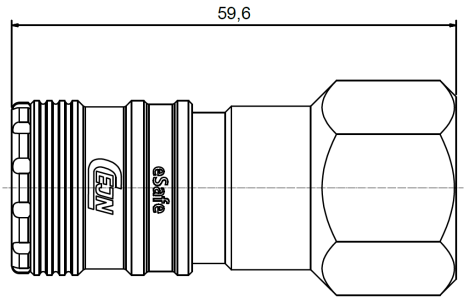

Ordering Information

Ordering Information	Weight KG	Dimension mm
2813 9100 23	0,119	64x25x25

C QRC-S-E-6mm

- **Safe working because the hose is not ejected when disconnected (whiplash effect), DIN EN ISO 4414 and DIN EN 983**
- **Hardened galvanized steel for an extended service life**
- **Low coupling force for easy coupling**

- European standard profile with nominal width of 7.6
- For extremely high air flow rate
- Max. operating pressure 16 bar
- Free of silicone

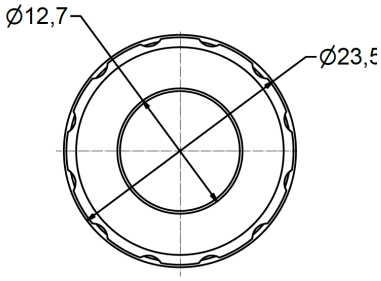

Specifications

Inlet Connection	6mm hose nozzle
Working pressure	0-16 bar
Max. Pressure	35 bar
Wrench size	20 mm
Nominal dia.	7,6 mm
Flow rate 6 bar European	2.250 l/min

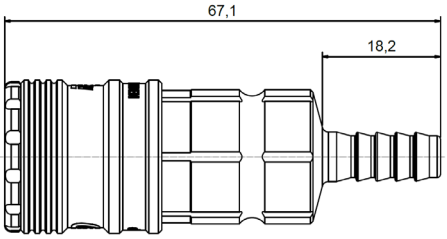

Ordering Information

Ordering Information	Weight KG	Dimension mm
2813 9100 24	0,100	68x25x25

C QRC-S-E-9mm

- **Safe working because the hose is not ejected when disconnected (whiplash effect), DIN EN ISO 4414 and DIN EN 983**
- **Hardened galvanized steel for an extended service life**
- **Low coupling force for easy coupling**

- European standard profile with nominal width of 7.6
- For extremely high air flow rate
- Max. operating pressure 16 bar
- Free of silicone

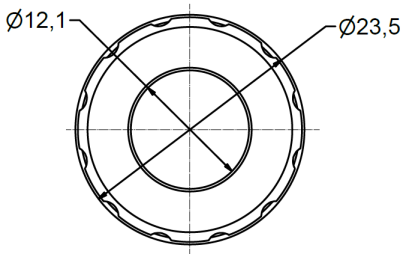

Specifications

Inlet Connection	9mm hose nozzle
Working pressure	0-16 bar
Max. Pressure	35 bar
Wrench size	20 mm
Nominal dia.	7,6 mm
Flow rate 6 bar European	2.250 l/min

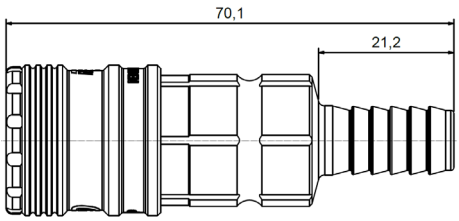

Ordering Information

Ordering Information	Weight KG	Dimension mm
2813 9100 26	0,105	68x25x25

C QRC-S-E-13mm

- **Safe working because the hose is not ejected when disconnected (whiplash effect), DIN EN ISO 4414 and DIN EN 983**
- **Hardened galvanized steel for an extended service life**
- **Low coupling force for easy coupling**

- European standard profile with nominal width of 7.6
- For extremely high air flow rate
- Max. operating pressure 16 bar
- Free of silicone

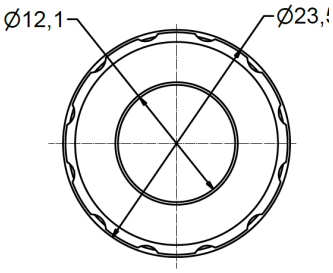

Specifications

Inlet Connection	13mm hose nozzle
Working pressure	0-16 bar
Max. Pressure	35 bar
Wrench size	20 mm
Nominal dia.	7,6 mm
Flow rate 6 bar European	2.250 l/min

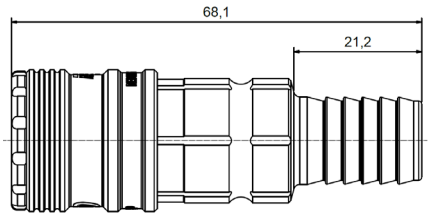

Ordering Information

Ordering Information	Weight KG	Dimension mm
2813 9100 26	0,105	68x25x25

C QRC-U-1/4"m

- **Brass quick-release coupling with Universal profile**
- **Fits to**
  - **European standard profile**
  - **ARO profile**
  - **ISO 6150 B profile**
  - **Italian profile**

- Universal profile
- Material: nickel-plated Brass
- Temperature range -20°C - +80°C

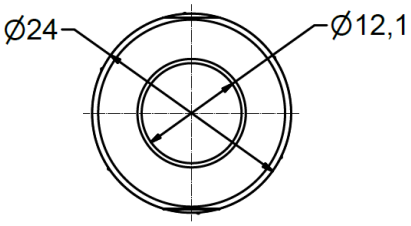

Specifications

Inlet Connection	1/4“ male BSP thread
Working pressure	0-16 bar
Max. Pressure	35 bar
Wrench size	21 mm
Nominal dia.	7,2 mm
Flow rate 6 bar European	2.150 l/min
Flow rate 6 bar ARO	1.600 l/min
Flow rate 6 bar Iso 6150 B	1.450 l/min
Flow rate 6 bar Italian	1.300 l/min
Dimension	49x24x24

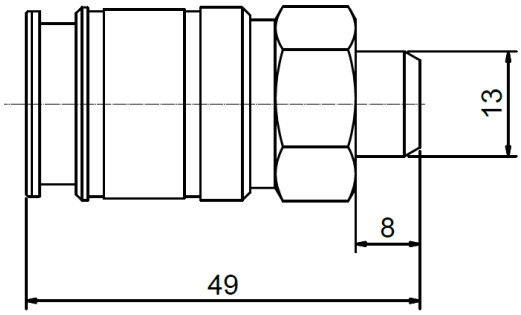

Ordering Information

Ordering Information	Weight KG
2813 9100 84	0,073

C QRC-U-3/8"m

- **Brass quick-release coupling with Universal profile**
- **Fits to**
  - **European standard profile**
  - **ARO profile**
  - **ISO 6150 B profile**
  - **Italian profile**

- Universal profile
- Material: nickel-plated Brass
- Temperature range -20°C - +80°C

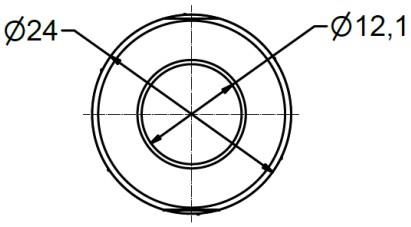

Specifications

Inlet Connection	3/8“ male BSP thread
Working pressure	0-16 bar
Max. Pressure	35 bar
Wrench size	21 mm
Nominal dia.	7,2 mm
Flow rate 6 bar European	2.150 l/min
Flow rate 6 bar ARO	1.600 l/min
Flow rate 6 bar Iso 6150 B	1.450 l/min
Flow rate 6 bar Italian	1.300 l/min
Dimension	49x24x24

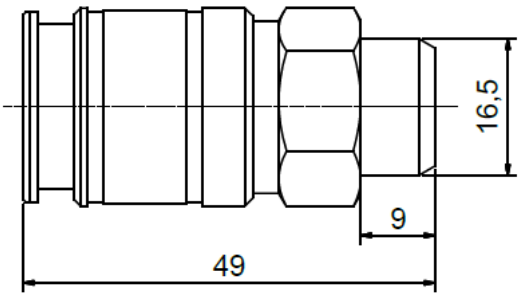

Ordering Information

Ordering Information	Weight KG
2813 9100 85	0,079

C QRC-U-1/2"m

- **Brass quick-release coupling with Universal profile**
- **Fits to**
  - **European standard profile**
  - **ARO profile**
  - **ISO 6150 B profile**
  - **Italian profile**

- Universal profile
- Material: nickel-plated Brass
- Temperature range -20°C - +80°C

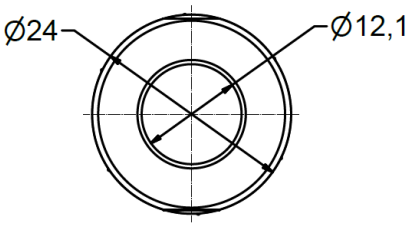

Specifications

Inlet Connection	1/2“ male BSP thread
Working pressure	0-16 bar
Max. Pressure	35 bar
Wrench size	24 mm
Nominal dia.	7,2 mm
Flow rate 6 bar European	2.150 l/min
Flow rate 6 bar ARO	1.600 l/min
Flow rate 6 bar Iso 6150 B	1.450 l/min
Flow rate 6 bar Italian	1.300 l/min
Dimension	49x24x24

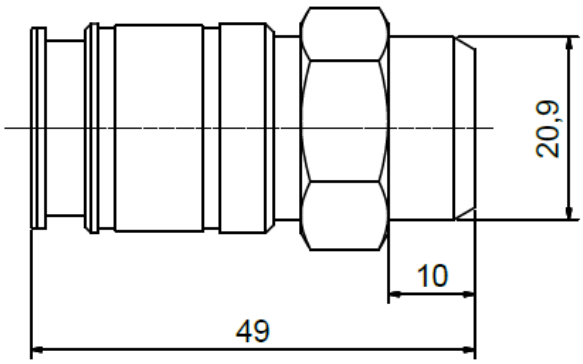

Ordering Information

Ordering Information	Weight KG
2813 9100 86	0,086

C QRC-U-1/4“f

- **Brass quick-release coupling with Universal profile**
- **Fits to**
  - **European standard profile**
  - **ARO profile**
  - **ISO 6150 B profile**
  - **Italian profile**

- Universal profile
- Material: nickel-plated Brass
- Temperature range -20°C - +80°C

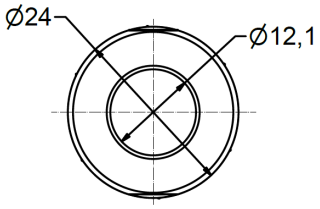

Specifications

Inlet Connection	1/4“ female BSP thread
Working pressure	0-16 bar
Max. Pressure	35 bar
Wrench size	21 mm
Nominal dia.	7,2 mm
Flow rate 6 bar European	2.150 l/min
Flow rate 6 bar ARO	1.600 l/min
Flow rate 6 bar Iso 6150 B	1.450 l/min
Flow rate 6 bar Italian	1.300 l/min
Dimension	51x24x24

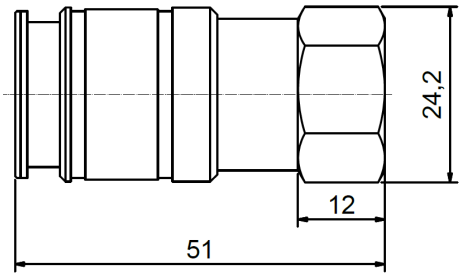

Ordering Information

Ordering Information	Weight KG
2813 9100 87	0,088

C QRC-U-3/8“f

- **Brass quick-release coupling with Universal profile**
- **Fits to**
  - **European standard profile**
  - **ARO profile**
  - **ISO 6150 B profile**
  - **Italian profile**

- Universal profile
- Material: nickel-plated Brass
- Temperature range -20°C - +80°C

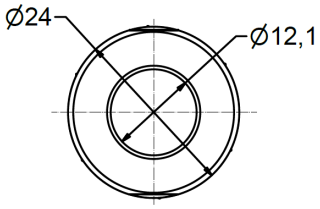

Specifications

Inlet Connection	3/8“ female BSP thread
Working pressure	0-16 bar
Max. Pressure	35 bar
Wrench size	21 mm
Nominal dia.	7,2 mm
Flow rate 6 bar European	2.150 l/min
Flow rate 6 bar ARO	1.600 l/min
Flow rate 6 bar Iso 6150 B	1.450 l/min
Flow rate 6 bar Italian	1.300 l/min
Dimension	51x24x24

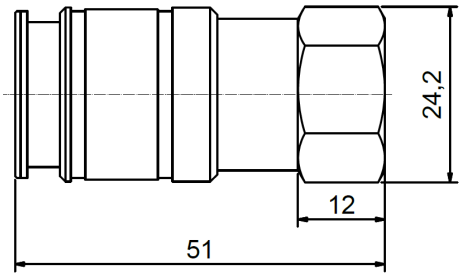

Ordering Information

Ordering Information	Weight KG
2813 9100 88	0,095

C QRC-U-1/2“f

- **Brass quick-release coupling with Universal profile**
- **Fits to**
  - **European standard profile**
  - **ARO profile**
  - **ISO 6150 B profile**
  - **Italian profile**

- Universal profile
- Material: nickel-plated Brass
- Temperature range -20°C - +80°C

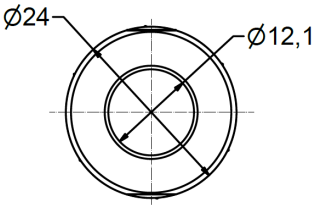

Specifications

Inlet Connection	1/2“ female BSP thread
Working pressure	0-16 bar
Max. Pressure	35 bar
Wrench size	24 mm
Nominal dia.	7,2 mm
Flow rate 6 bar European	2.150 l/min
Flow rate 6 bar ARO	1.600 l/min
Flow rate 6 bar Iso 6150 B	1.450 l/min
Flow rate 6 bar Italian	1.300 l/min
Dimension	51x24x24

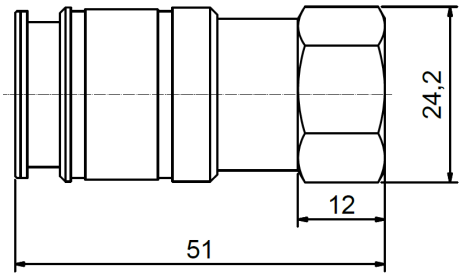

Ordering Information

Ordering Information	Weight KG
2813 9100 89	0,102

C QRC-U-6mm

- **Brass quick-release coupling with Universal profile**
- **Fits to**
  - **European standard profile**
  - **ARO profile**
  - **ISO 6150 B profile**
  - **Italian profile**

- Universal profile
- Material: nickel-plated Brass
- Temperature range -20°C - +80°C

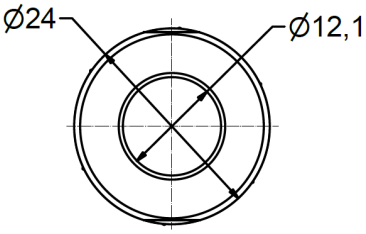

Specifications

Inlet Connection	6 mm hose nozzle
Working pressure	0-16 bar
Max. Pressure	35 bar
Wrench size	21 mm
Nominal dia.	7,2 mm
Flow rate 6 bar European	2.150 l/min
Flow rate 6 bar ARO	1.600 l/min
Flow rate 6 bar Iso 6150 B	1.450 l/min
Flow rate 6 bar Italian	1.300 l/min
Dimension	61x24x24

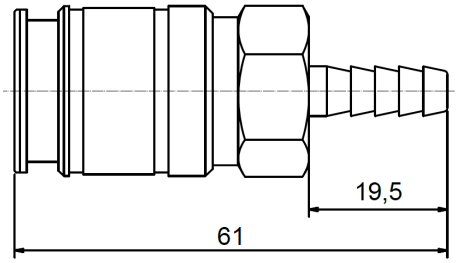

Ordering Information

Ordering Information	Weight KG
2813 9100 90	0,072

C QRC-U-9mm

- **Brass quick-release coupling with Universal profile**
- **Fits to**
  - **European standard profile**
  - **ARO profile**
  - **ISO 6150 B profile**
  - **Italian profile**

- Universal profile
- Material: nickel-plated Brass
- Temperature range -20°C - +80°C

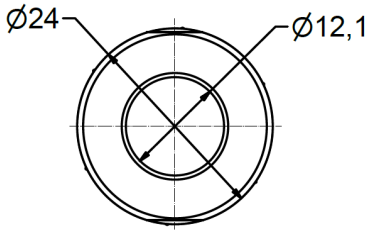

Specifications

Inlet Connection	10 mm hose nozzle
Working pressure	0-16 bar
Max. Pressure	35 bar
Wrench size	21 mm
Nominal dia.	7,2 mm
Flow rate 6 bar European	2.150 l/min
Flow rate 6 bar ARO	1.600 l/min
Flow rate 6 bar Iso 6150 B	1.450 l/min
Flow rate 6 bar Italian	1.300 l/min
Dimension	61x24x24

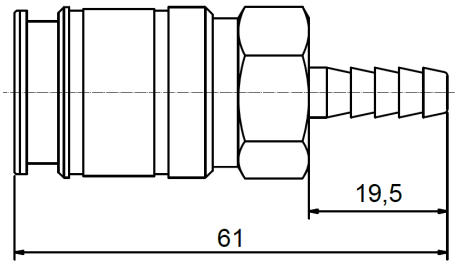

Ordering Information

Ordering Information	Weight KG
2813 9100 91	0,075

C QRC-U-13mm

- **Brass quick-release coupling with Universal profile**
- **Fits to**
  - **European standard profile**
  - **ARO profile**
  - **ISO 6150 B profile**
  - **Italian profile**

- Universal profile
- Material: nickel-plated Brass
- Temperature range -20°C - +80°C

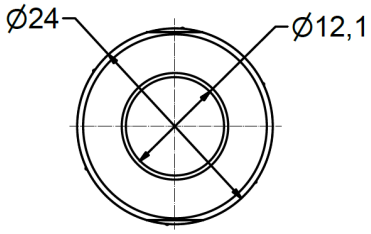

Specifications

Inlet Connection	12 mm hose nozzle
Working pressure	0-16 bar
Max. Pressure	35 bar
Wrench size	21 mm
Nominal dia.	7,2 mm
Flow rate 6 bar European	2.150 l/min
Flow rate 6 bar ARO	1.600 l/min
Flow rate 6 bar Iso 6150 B	1.450 l/min
Flow rate 6 bar Italian	1.300 l/min
Dimension	61x24x24

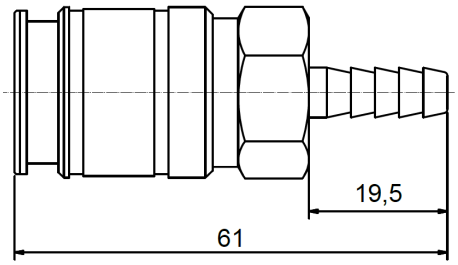

Ordering Information

Ordering Information	Weight KG
2813 9100 92	0,079

Maintenance units

Excellent air quality for every application

Achieve maximum compressed air quality and outstanding working results with our filters and maintenance units – from prefilters and microfilters through to activated carbon filters.

FRL PR-1/4"f

- **Pressure regulator with piston for high operational reliability**
- **High stability of adjusting pressure, even if the input pressure or the flow rate changes**
- **Assembly independent of flow direction thanks to double-sided connection option for pressure gauge**

- Working pressure range : 0-12 Bar
- Entry pressure: 0-18 bar
- With lockable adjustment button
- Standard features include: pressure gauge

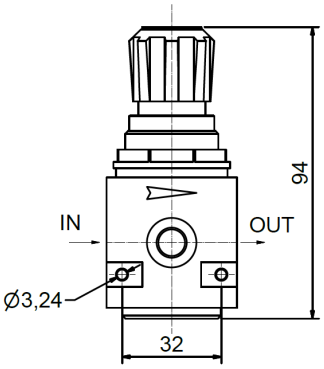

Specifications

Inlet Connection	¼“ Female BSP thread
Outlet Connection	¼“ Female BSP thread
Manometer Connection	¼“ Female BSP thread
Flow rate	700 l/min
Dimension	42 x 42 x 94

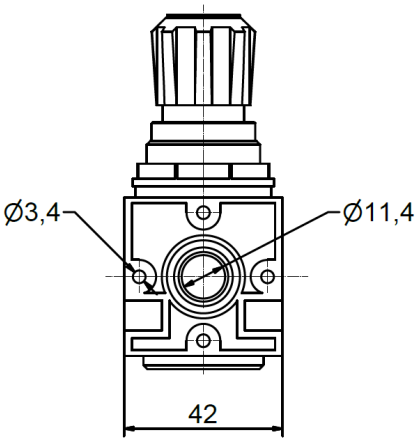

Ordering Information

Ordering Information	Weight KG
2813 9200 00	0,321

FRL PR-1/4"f NPT

- **Pressure regulator with piston for high operational reliability**
- **High stability of adjusting pressure, even if the input pressure or the flow rate changes**
- **Assembly independent of flow direction thanks to double-sided connection option for pressure gauge**

- Working pressure range : 0-12 Bar
- Entry pressure: 0-18 bar
- With lockable adjustment button
- Standard features include: pressure gauge

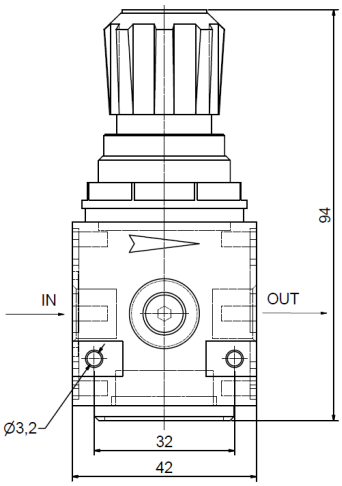

Specifications

Inlet Connection	¼“ Female NPT thread
Outlet Connection	¼“ Female NPT thread
Manometer Connection	¼“ Female NPT thread
Flow rate	700 l/min
Dimension	42 x 42 x 94

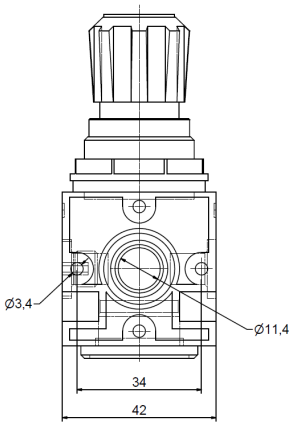

Ordering Information

Ordering Information	Weight KG
2813 9200 33	0,321

FRL PR-3/8"f

- **Pressure regulator with piston for high operational reliability**
- **High stability of adjusting pressure, even if the input pressure or the flow rate changes**
- **Assembly independent of flow direction thanks to double-sided connection option for pressure gauge**

- Working pressure range : 0-12 Bar
- Entry pressure: 0-18 bar
- With lockable adjustment button
- Standard features include: pressure gauge

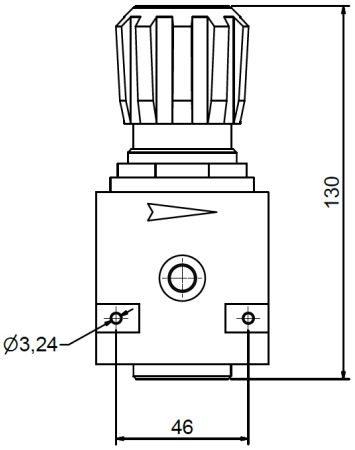

Specifications

Inlet Connection	3/8" Female BSP thread
Outlet Connection	3/8" Female BSP thread
Manometer Connection	3/8" Female BSP thread
Flow rate	2.500 l/min
Dimension	60 x 60 x 130

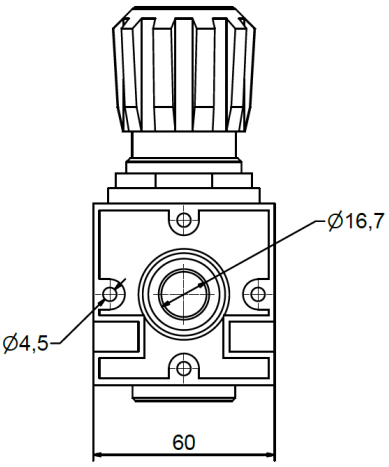

Ordering Information

Ordering Information	Weight KG
2813 9200 01	0,839

FRL PR-3/8"f NPT

- **Pressure regulator with piston for high operational reliability**
- **High stability of adjusting pressure, even if the input pressure or the flow rate changes**
- **Assembly independent of flow direction thanks to double-sided connection option for pressure gauge**

- Working pressure range : 0-12 Bar
- Entry pressure: 0-18 bar
- With lockable adjustment button
- Standard features include: pressure gauge

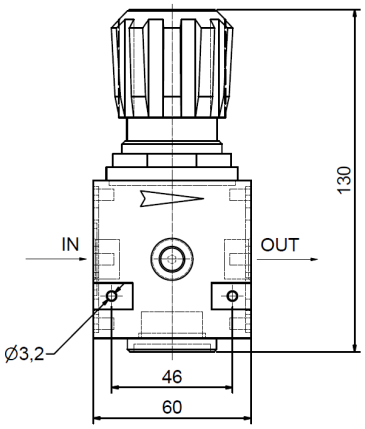

Specifications

Inlet Connection	3/8" Female NPT thread
Outlet Connection	3/8" Female NPT thread
Manometer Connection	3/8" Female NPT thread
Flow rate	2.500 l/min
Dimension	60 x 60 x 130

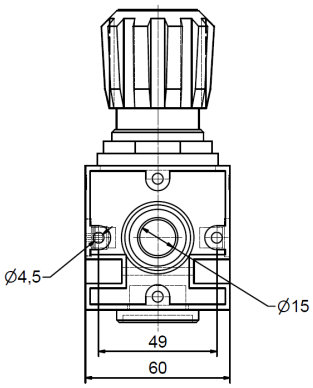

Ordering Information

Ordering Information	Weight KG
2813 9200 34	0,839

FRL PR-1/2"f

- **Pressure regulator with piston for high operational reliability**
- **High stability of adjusting pressure, even if the input pressure or the flow rate changes**
- **Assembly independent of flow direction thanks to double-sided connection option for pressure gauge**

- Working pressure range : 0-12 Bar
- Entry pressure: 0-18 bar
- With lockable adjustment button
- Standard features include: pressure gauge

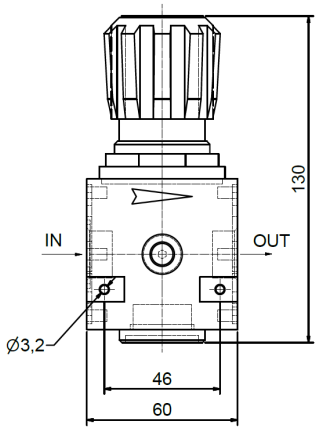

Specifications

Inlet Connection	1/2" Female BSP thread
Outlet Connection	1/2" Female BSP thread
Manometer Connection	1/2" Female BSP thread
Flow rate	2.500 l/min
Dimension	60 x 60 x 130

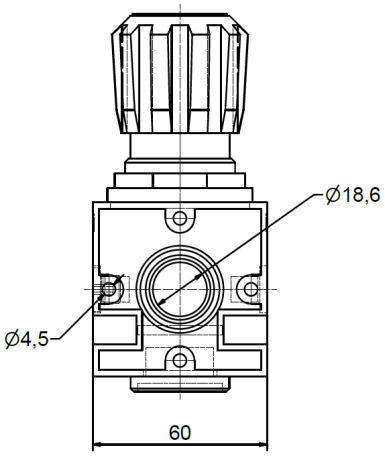

Ordering Information

Ordering Information	Weight KG
2813 9200 02	0,813

FRL PR-1/2"f NPT

- **Pressure regulator with piston for high operational reliability**
- **High stability of adjusting pressure, even if the input pressure or the flow rate changes**
- **Assembly independent of flow direction thanks to double-sided connection option for pressure gauge**

- Working pressure range : 0-12 Bar
- Entry pressure: 0-18 bar
- With lockable adjustment button
- Standard features include: pressure gauge

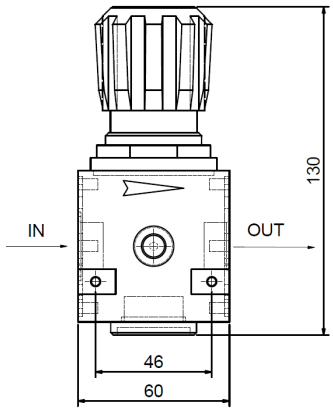

Specifications

Inlet Connection	1/2" Female NPT thread
Outlet Connection	1/2" Female NPT thread
Manometer Connection	1/2" Female NPT thread
Flow rate	2.500 l/min
Dimension	60 x 60 x 130

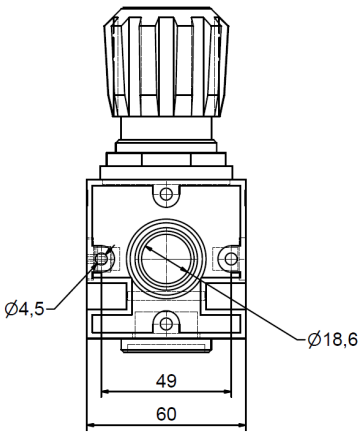

Ordering Information

Ordering Information	Weight KG
2813 9200 35	0,813

FRL PR-3/4"f

- **Pressure regulator with piston for high operational reliability**
- **High stability of adjusting pressure, even if the input pressure or the flow rate changes**
- **Assembly independent of flow direction thanks to double-sided connection option for pressure gauge**

- Working pressure range : 0-12 Bar
- Entry pressure: 0-18 bar
- With lockable adjustment button
- Standard features include: pressure gauge

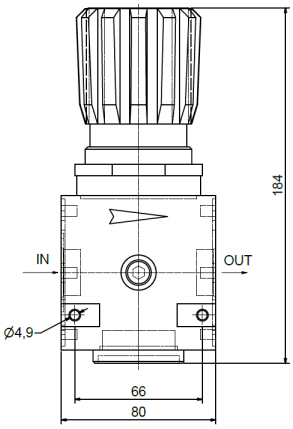

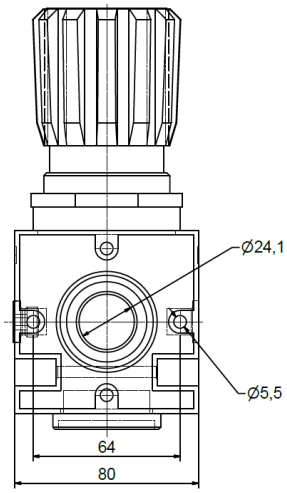

Specifications

Inlet Connection	3/4" Female BSP thread
Outlet Connection	3/4" Female BSP thread
Manometer Connection	3/4" Female BSP thread
Flow rate	4.500 l/min
Dimension	80x80x184

Ordering Information

Ordering Information	Weight KG
2813 9200 03	1,61

FRL PR-3/4"f NPT

- **Pressure regulator with piston for high operational reliability**
- **High stability of adjusting pressure, even if the input pressure or the flow rate changes**
- **Assembly independent of flow direction thanks to double-sided connection option for pressure gauge**

- Working pressure range : 0-12 Bar
- Entry pressure: 0-18 bar
- With lockable adjustment button
- Standard features include: pressure gauge

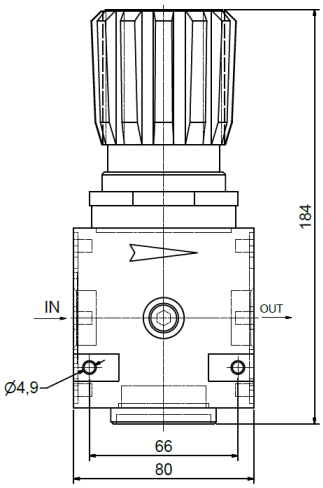

Specifications

Inlet Connection	3/4" Female NPT thread
Outlet Connection	3/4" Female NPT thread
Manometer Connection	3/4" Female NPT thread
Flow rate	4.500 l/min
Dimension	80x80x184

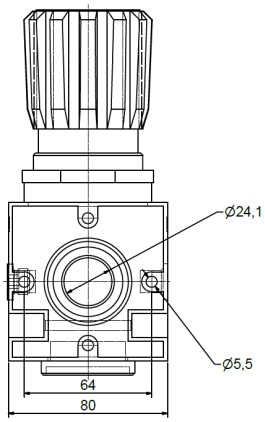

Ordering Information

Ordering Information	Weight KG
2813 9200 04	1,61

FRL PR-1"f

- **Pressure regulator with piston for high operational reliability**
- **High stability of adjusting pressure, even if the input pressure or the flow rate changes**
- **Assembly independent of flow direction thanks to double-sided connection option for pressure gauge**

- Working pressure range : 0-12 Bar
- Entry pressure: 0-18 bar
- With lockable adjustment button
- Standard features include: pressure gauge

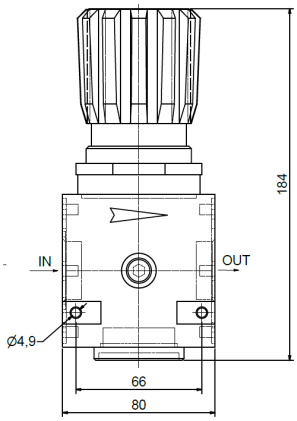

Specifications

Inlet Connection	1" Female BSP thread
Outlet Connection	1" Female BSP thread
Manometer Connection	1" Female BSP thread
Flow rate	4.500 l/min
Dimension	80x80x184

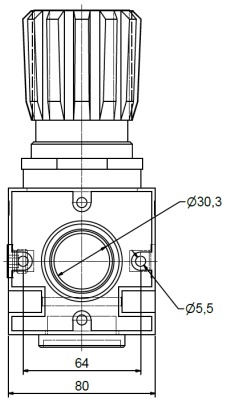

Ordering Information

Ordering Information	Weight KG
2813 9200 05	1,513

FRL PR-1"f NPT

- **Pressure regulator with piston for high operational reliability**
- **High stability of adjusting pressure, even if the input pressure or the flow rate changes**
- **Assembly independent of flow direction thanks to double-sided connection option for pressure gauge**

- Working pressure range : 0-12 Bar
- Entry pressure: 0-18 bar
- With lockable adjustment button
- Standard features include: pressure gauge

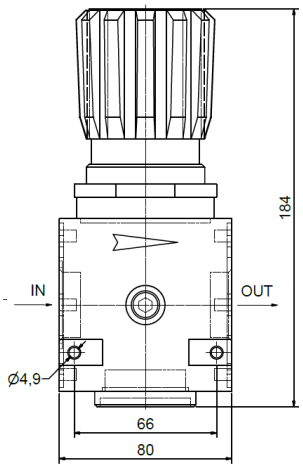

Specifications

Inlet Connection	1" Female NPT thread
Outlet Connection	1" Female NPT thread
Manometer Connection	1" Female NPT thread
Flow rate	4.500 l/min
Dimension	80x80x184

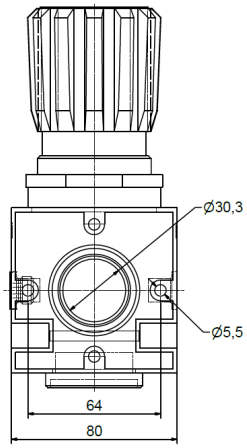

Ordering Information

Ordering Information	Weight KG
2813 9200 06	1,513

FRL WS-1/4"f

- **Centrifugal acceleration of compressed air for efficient separation of dirt particles and condensate**
- **Filtering function upstream of the pressure reducer**

- Entry pressure: 0-18 bar
- Two-stage mechanical filter with 20 µm
- Semi-automatic drainage

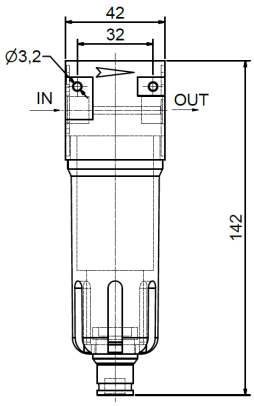

Specifications

Inlet Connection	¼“ Female BSP thread
Outlet Connection	¼“ Female BSP thread
Manometer Connection	¼“ Female BSP thread
Flow rate	1.720 l/min
Condensate tank volume	10 ml
Dimension	42x42x142

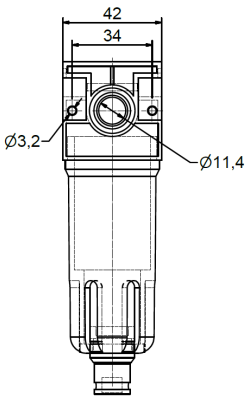

Ordering Information

Ordering Information	Weight KG
2813 9200 07	0,392

FRL WS-1/4"f NPT

- **Centrifugal acceleration of compressed air for efficient separation of dirt particles and condensate**
- **Filtering function upstream of the pressure reducer**

- Entry pressure: 0-18 bar
- Two-stage mechanical filter with 20 µm
- Semi-automatic drainage

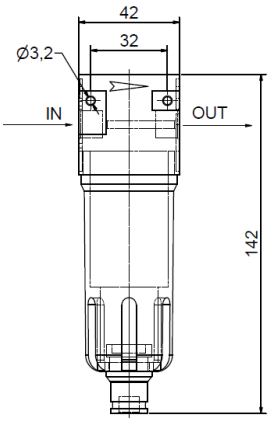

Specifications

Inlet Connection	¼“ Female NPT thread
Outlet Connection	¼“ Female NPT thread
Manometer Connection	¼“ Female NPT thread
Flow rate	1.720 l/min
Condensate tank volume	10 ml
Dimension	42x42x190

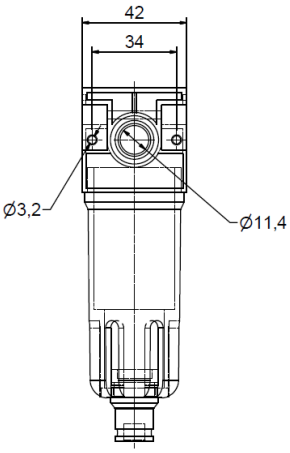

Ordering Information

Ordering Information	Weight KG
2813 9200 36	0,392

FRL WS-3/8"f

- **Centrifugal acceleration of compressed air for efficient separation of dirt particles and condensate**
- **Filtering function upstream of the pressure reducer**

- Entry pressure: 0-18 bar
- Two-stage mechanical filter with 20 µm
- Semi-automatic drainage

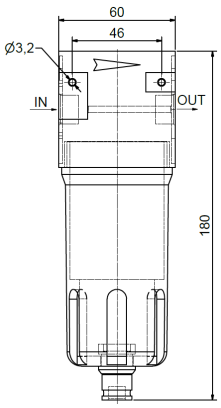

Specifications

Inlet Connection	3/8“ Female BSP thread
Outlet Connection	3/8“ Female BSP thread
Manometer Connection	3/8“ Female BSP thread
Flow rate	4.100 l/min
Condensate tank volume	45 ml
Dimension	60x60x180

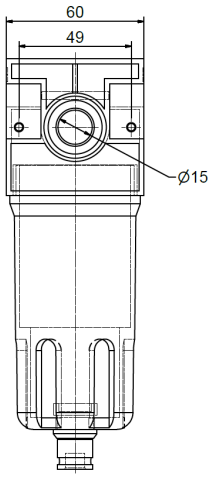

Ordering Information

Ordering Information	Weight KG
2813 9200 08	0,849

FRL WS-3/8"f NPT

- **Centrifugal acceleration of compressed air for efficient separation of dirt particles and condensate**
- **Filtering function upstream of the pressure reducer**

- Entry pressure: 0-18 bar
- Two-stage mechanical filter with 20 µm
- Semi-automatic drainage

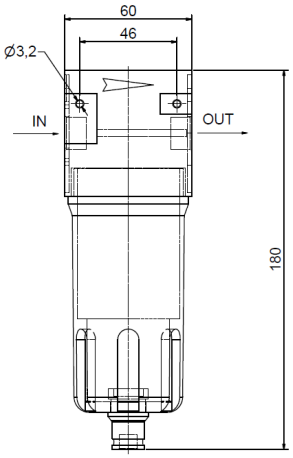

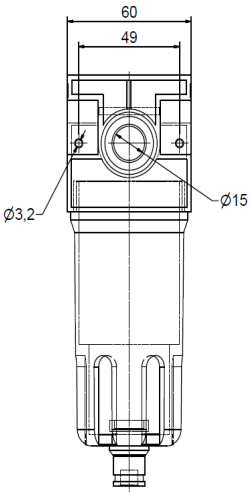

Specifications

Inlet Connection	3/8“ Female NPT thread
Outlet Connection	3/8“ Female NPT thread
Manometer Connection	3/8“ Female NPT thread
Flow rate	4.100 l/min
Condensate tank volume	45 ml
Dimension	60x60x180

Ordering Information

Ordering Information	Weight KG
2813 9200 37	0,849

FRL WS-1/2"f

- **Centrifugal acceleration of compressed air for efficient separation of dirt particles and condensate**
- **Filtering function upstream of the pressure reducer**

- Entry pressure: 0-18 bar
- Two-stage mechanical filter with 20 µm
- Semi-automatic drainage

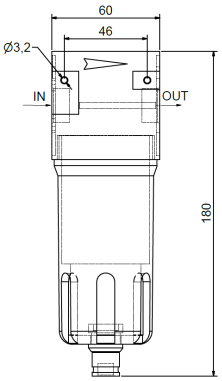

Specifications

Inlet Connection	1/2“ Female BSP thread
Outlet Connection	1/2“ Female BSP thread
Manometer Connection	1/2“ Female BSP thread
Flow rate	4.100 l/min
Condensate tank volume	45 ml
Dimension	60x60x180

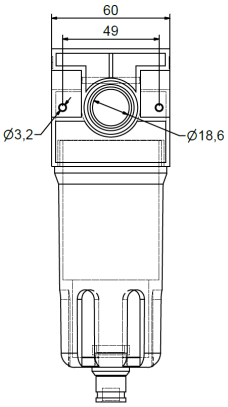

Ordering Information

Ordering Information	Weight KG
2813 9200 09	0,839

FRL WS-1/2"f NPT

- **Centrifugal acceleration of compressed air for efficient separation of dirt particles and condensate**
- **Filtering function upstream of the pressure reducer**

- Entry pressure: 0-18 bar
- Two-stage mechanical filter with 20 µm
- Semi-automatic drainage

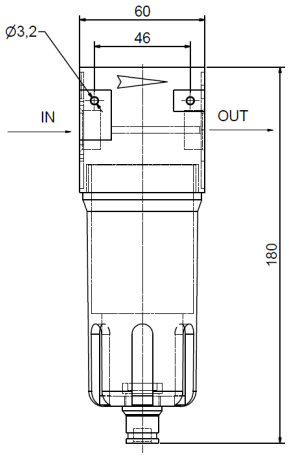

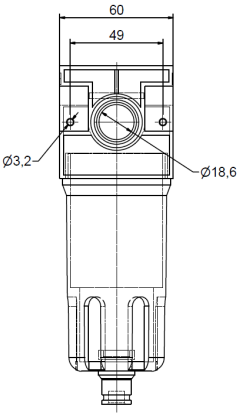

Specifications

Inlet Connection	1/2“ Female NPT thread
Outlet Connection	1/2“ Female NPT thread
Manometer Connection	1/2“ Female NPT thread
Flow rate	4.100 l/min
Condensate tank volume	45 ml
Dimension	60x60x180

Ordering Information

Ordering Information	Weight KG
2813 9200 38	0,839

FRL WS-3/4"f

- **Centrifugal acceleration of compressed air for efficient separation of dirt particles and condensate**
- **Filtering function upstream of the pressure reducer**

- Entry pressure: 0-18 bar
- Two-stage mechanical filter with 20 µm
- Semi-automatic drainage

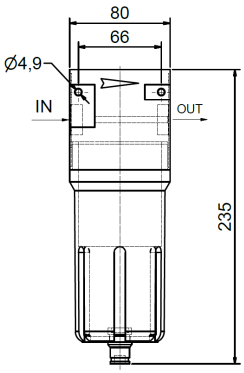

Specifications

Inlet Connection	3/4“ Female BSP thread
Outlet Connection	3/4“ Female BSP thread
Manometer Connection	3/4“ Female BSP thread
Flow rate	11.000 l/min
Condensate tank volume	170 ml
Dimension	80x110x235

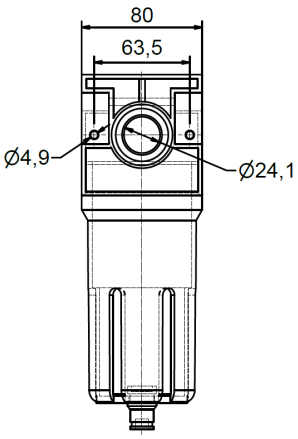

Ordering Information

Ordering Information	Weight KG
2813 9200 10	1,283

FRL WS-3/4"f NPT

- **Centrifugal acceleration of compressed air for efficient separation of dirt particles and condensate**
- **Filtering function upstream of the pressure reducer**

- Entry pressure: 0-18 bar
- Two-stage mechanical filter with 20 µm
- Semi-automatic drainage

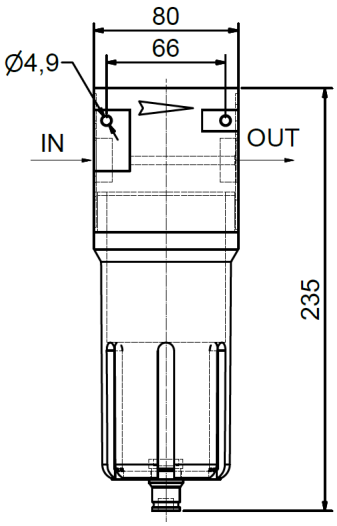

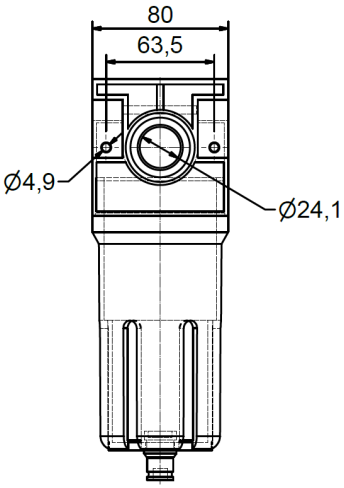

Specifications

Inlet Connection	3/4“ Female NPT thread
Outlet Connection	3/4“ Female NPT thread
Manometer Connection	3/4“ Female NPT thread
Flow rate	11.000 l/min
Condensate tank volume	170 ml
Dimension	80x110x235

Ordering Information

Ordering Information	Weight KG
2813 9200 11	1,283

FRL WS-1"f

- **Centrifugal acceleration of compressed air for efficient separation of dirt particles and condensate**
- **Filtering function upstream of the pressure reducer**

- Entry pressure: 0-18 bar
- Two-stage mechanical filter with 20 µm
- Semi-automatic drainage

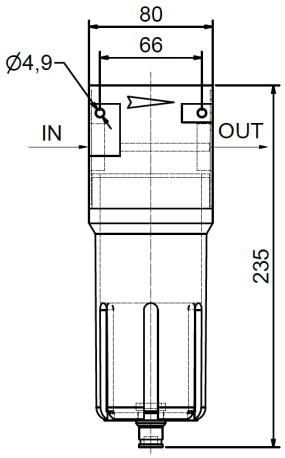

Specifications

Inlet Connection	1“ Female BSP thread
Outlet Connection	1“ Female BSP thread
Manometer Connection	1“ Female BSP thread
Flow rate	11.000 l/min
Condensate tank volume	170 ml
Dimension	80x110x235

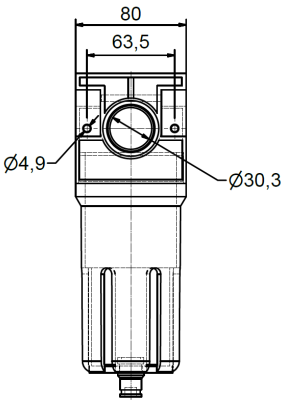

Ordering Information

Ordering Information	Weight KG
2813 9200 12	1,24

FRL WS-1"f NPT

- **Centrifugal acceleration of compressed air for efficient separation of dirt particles and condensate**
- **Filtering function upstream of the pressure reducer**

- Entry pressure: 0-18 bar
- Two-stage mechanical filter with 20 µm
- Semi-automatic drainage

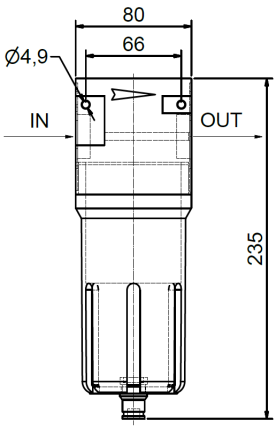

Specifications

Inlet Connection	1“ Female NPT thread
Outlet Connection	1“ Female NPT thread
Manometer Connection	1“ Female NPT thread
Flow rate	11.000 l/min
Condensate tank volume	170 ml
Dimension	80x110x235

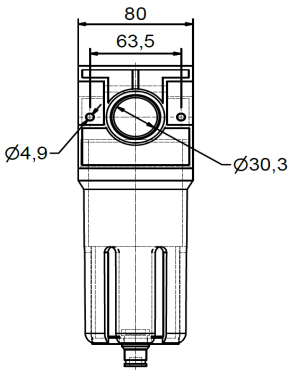

Ordering Information

Ordering Information	Weight KG
2813 9200 13	1,24

FRL FPR-1/4"f

- **Combines the technical benefits of the pressure reducer and the water separator with filter in one compact unit**
- **Pressure regulator with piston for high operational reliability**
- **Assembly independent of flow direction thanks to double-sided connection option for pressure gauge**

- Working pressure range : 0-12 Bar
- Entry pressure: 0-18 bar
- Filter element: 20 µm

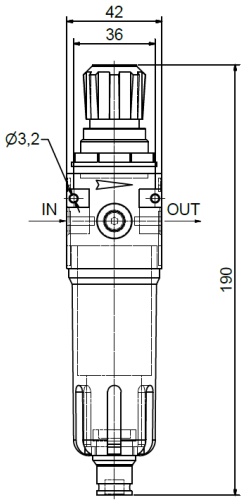

Specifications

Inlet Connection	¼“ Female BSP thread
Outlet Connection	¼“ Female BSP thread
Manometer Connection	¼“ Female BSP thread
Flow rate	700 l/min
Condensate tank volume	10 ml
Dimension	42x42x190

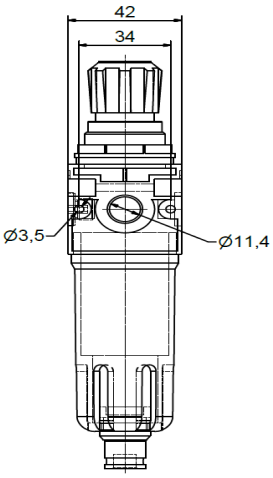

Ordering Information

Ordering Information	Weight KG
2813 9200 14	0,392

FRL FPR-1/4"f NPT

- **Combines the technical benefits of the pressure reducer and the water separator with filter in one compact unit**
- **Pressure regulator with piston for high operational reliability**
- **Assembly independent of flow direction thanks to double-sided connection option for pressure gauge**

- Working pressure range : 0-12 Bar
- Entry pressure: 0-18 bar
- Filter element: 20 µm

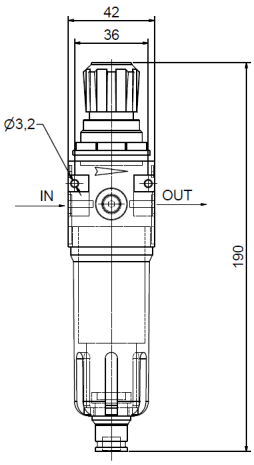

Specifications	
Inlet Connection	¼“ Female NPT thread
Outlet Connection	¼“ Female NPT thread
Manometer Connection	¼“ Female NPT thread
Flow rate	700 l/min
Condensate tank volume	10 ml
Dimension	42x42x190

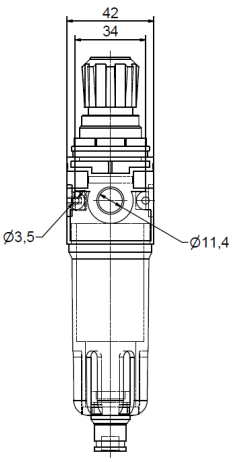

Ordering Information

Ordering Information	Weight KG
2813 9200 39	0,392

FRL FPR-3/8"f

- **Combines the technical benefits of the pressure reducer and the water separator with filter in one compact unit**
- **Pressure regulator with piston for high operational reliability**
- **Assembly independent of flow direction thanks to double-sided connection option for pressure gauge**

- Working pressure range : 0-12 Bar
- Entry pressure: 0-18 bar
- Filter element: 20 µm

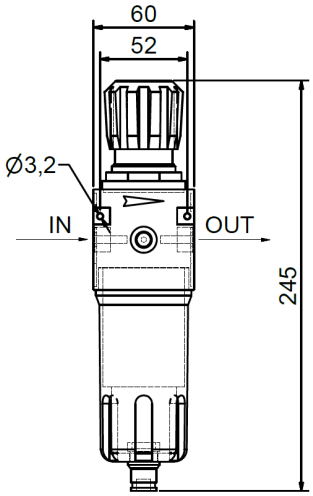

Specifications

Inlet Connection	3/8“ Female BSP thread
Outlet Connection	3/8“ Female BSP thread
Manometer Connection	3/8“ Female BSP thread
Flow rate	2.500 l/min
Condensate tank volume	45 ml
Dimension	60x60x245

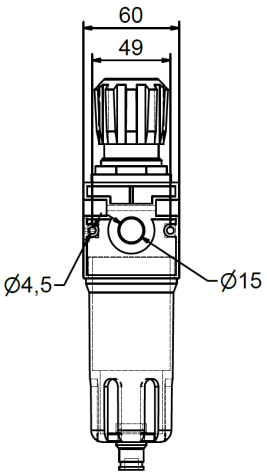

Ordering Information

Ordering Information	Weight KG
2813 9200 15	0,963

FRL FPR-3/8"f NPT

- **Combines the technical benefits of the pressure reducer and the water separator with filter in one compact unit**
- **Pressure regulator with piston for high operational reliability**
- **Assembly independent of flow direction thanks to double-sided connection option for pressure gauge**

- Working pressure range : 0-12 Bar
- Entry pressure: 0-18 bar
- Filter element: 20 µm

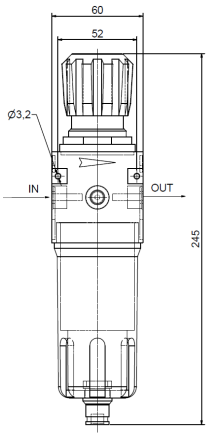

Specifications

Inlet Connection	3/8“ Female NPT thread
Outlet Connection	3/8“ Female NPT thread
Manometer Connection	3/8“ Female NPT thread
Flow rate	2.500 l/min
Condensate tank volume	45 ml
Dimension	60x60x245

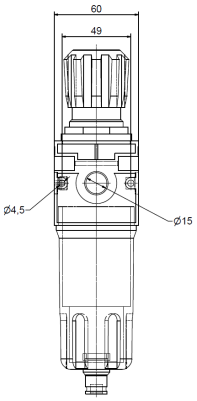

Ordering Information

Ordering Information	Weight KG
2813 9200 40	0,963

FRL FPR-1/2"f

- **Combines the technical benefits of the pressure reducer and the water separator with filter in one compact unit**
- **Pressure regulator with piston for high operational reliability**
- **Assembly independent of flow direction thanks to double-sided connection option for pressure gauge**

- Working pressure range : 0-12 Bar
- Entry pressure: 0-18 bar
- Filter element: 20 µm

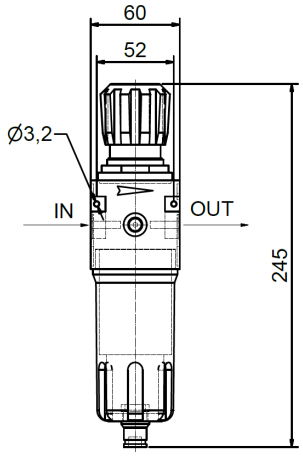

Specifications

Inlet Connection	1/2“ Female BSP thread
Outlet Connection	1/2“ Female BSP thread
Manometer Connection	1/2“ Female BSP thread
Flow rate	2.500 l/min
Condensate tank volume	45 ml
Dimension	60x60x245

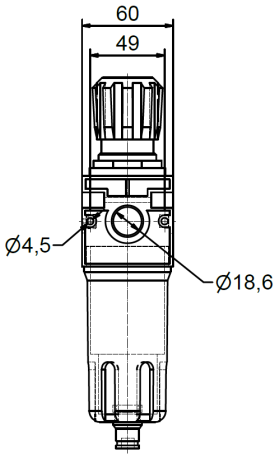

Ordering Information

Ordering Information	Weight KG
2813 9200 16	1,114

FRL FPR-1/2"f NPT

- **Combines the technical benefits of the pressure reducer and the water separator with filter in one compact unit**
- **Pressure regulator with piston for high operational reliability**
- **Assembly independent of flow direction thanks to double-sided connection option for pressure gauge**

- Working pressure range : 0-12 Bar
- Entry pressure: 0-18 bar
- Filter element: 20 µm

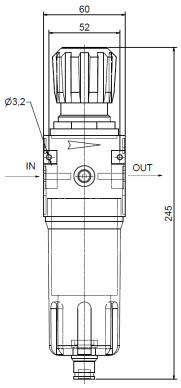

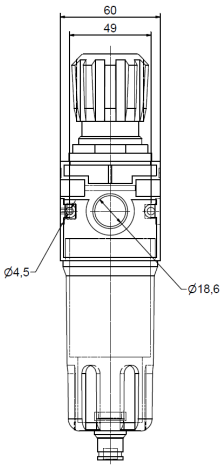

Specifications

Inlet Connection	1/2“ Female NPT thread
Outlet Connection	1/2“ Female NPT thread
Manometer Connection	1/2“ Female NPT thread
Flow rate	2.500 l/min
Condensate tank volume	45 ml
Dimension	60x60x245

Ordering Information

Ordering Information	Weight KG
2813 9200 41	1,114

FRL FPR-3/4"f

- **Combines the technical benefits of the pressure reducer and the water separator with filter in one compact unit**
- **Pressure regulator with piston for high operational reliability**
- **Assembly independent of flow direction thanks to double-sided connection option for pressure gauge**

- Working pressure range : 0-12 Bar
- Entry pressure: 0-18 bar
- Filter element: 20 µm

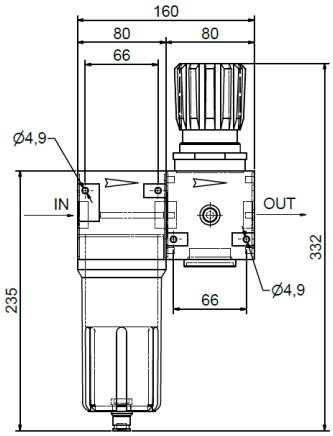

Specifications

Inlet Connection	3/4“ Female BSP thread
Outlet Connection	3/4“ Female BSP thread
Manometer Connection	3/4“ Female BSP thread
Flow rate	3.600 l/min
Condensate tank volume	170 ml
Dimension	160x80x332

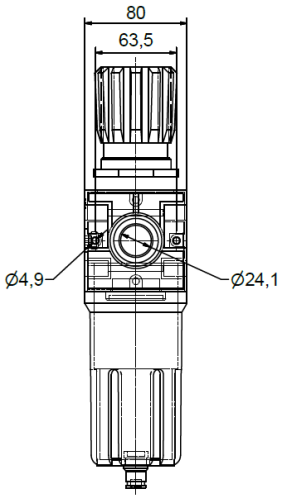

Ordering Information

Ordering Information	Weight KG
2813 9200 17	1,704

FRL FPR-3/4"f NPT

- **Combines the technical benefits of the pressure reducer and the water separator with filter in one compact unit**
- **Pressure regulator with piston for high operational reliability**
- **Assembly independent of flow direction thanks to double-sided connection option for pressure gauge**

- Working pressure range : 0-12 Bar
- Entry pressure: 0-18 bar
- Filter element: 20 µm

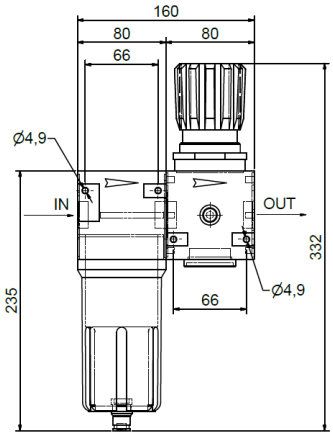

Specifications

Inlet Connection	3/4“ Female NPT thread
Outlet Connection	3/4“ Female NPT thread
Manometer Connection	3/4“ Female NPT thread
Flow rate	3.600 l/min
Condensate tank volume	170 ml
Dimension	160x80x332

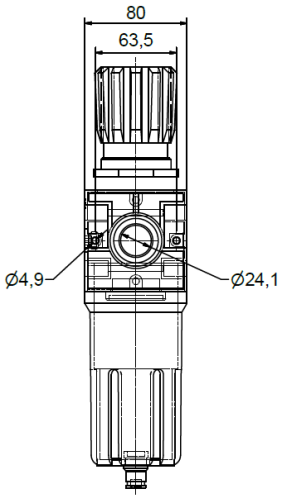

Ordering Information

Ordering Information	Weight KG
2813 9200 18	1,704

FRL FPR-1"f

- **Combines the technical benefits of the pressure reducer and the water separator with filter in one compact unit**
- **Pressure regulator with piston for high operational reliability**
- **Assembly independent of flow direction thanks to double-sided connection option for pressure gauge**

- Working pressure range : 0-12 Bar
- Entry pressure: 0-18 bar
- Filter element: 20 µm

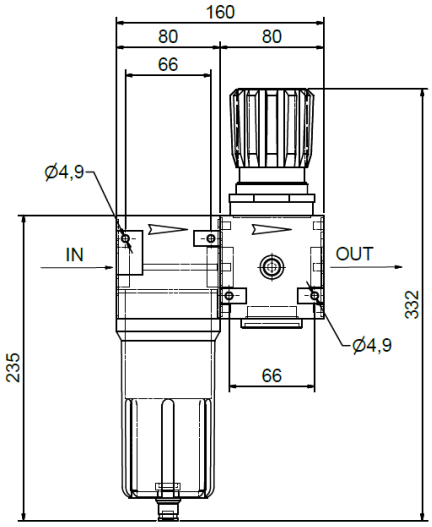

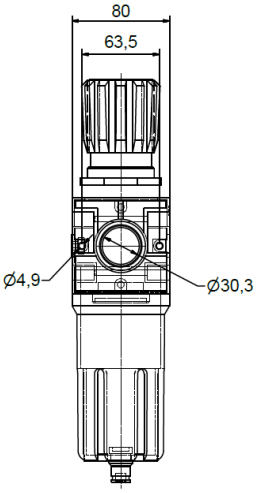

Specifications

Inlet Connection	1“ Female BSP thread
Outlet Connection	1“ Female BSP thread
Manometer Connection	1“ Female BSP thread
Flow rate	3.700 l/min
Condensate tank volume	170 ml
Dimension	160x80x332

Ordering Information

Ordering Information	Weight KG
2813 9200 19	1,647

FRL FPR-1"f NPT

- **Combines the technical benefits of the pressure reducer and the water separator with filter in one compact unit**
- **Pressure regulator with piston for high operational reliability**
- **Assembly independent of flow direction thanks to double-sided connection option for pressure gauge**

- Working pressure range : 0-12 Bar
- Entry pressure: 0-18 bar
- Filter element: 20 µm

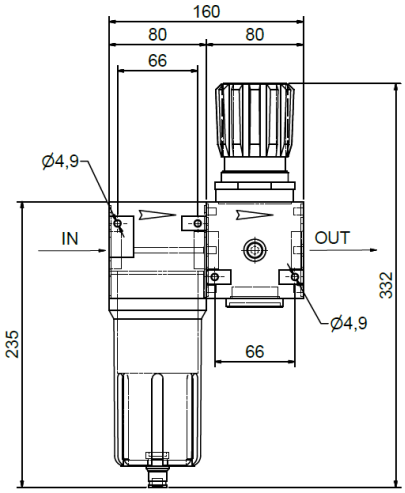

Specifications

Inlet Connection	1“ Female NPT thread
Outlet Connection	1“ Female NPT thread
Manometer Connection	1“ Female NPT thread
Flow rate	3.700 l/min
Condensate tank volume	170 ml
Dimension	160x80x332

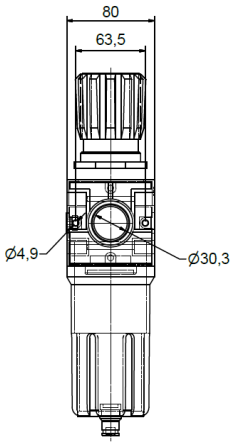

Ordering Information

Ordering Information	Weight KG
2813 9200 20	1,647

FRL MO-1/4"f

- **Regular oil flow for efficient supply to tools**
- **Proportional adjustment of the oil supply to the air flow rate for optimal lubrication possible, even at low pressures and low air flow rates**
- **Oil purification downstream of the filter pressure reducer**

- Working pressure range : 0-12 Bar
- Entry pressure: 0-18 bar
- Sight glass for oil

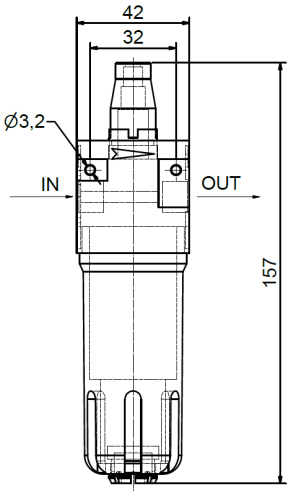

Specifications

Inlet Connection	¼“ Female BSP thread
Outlet Connection	¼“ Female BSP thread
Manometer Connection	¼“ Female BSP thread
Flow rate	1.100 l/min
Oil tank volume	50 ml
Dimension	42x42x156

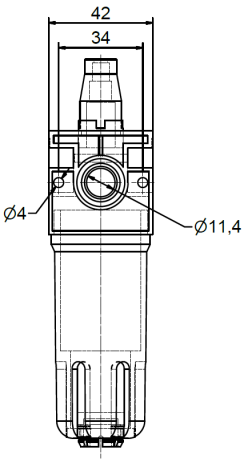

Ordering Information

Ordering Information	Weight KG
2813 9200 21	0,33

FRL MO-3/8"f

- **Regular oil flow for efficient supply to tools**
- **Proportional adjustment of the oil supply to the air flow rate for optimal lubrication possible, even at low pressures and low air flow rates**
- **Oil purification downstream of the filter pressure reducer**

- Working pressure range : 0-12 Bar
- Entry pressure: 0-18 bar
- Sight glass for oil

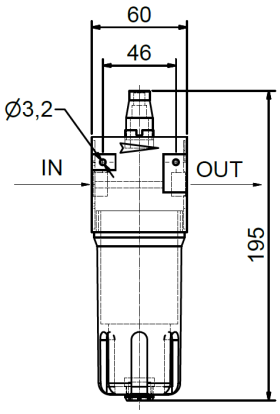

Specifications

Inlet Connection	3/8“ Female BSP thread
Outlet Connection	3/8“ Female BSP thread
Manometer Connection	3/8“ Female BSP thread
Flow rate	4.300 l/min
Oil tank volume	150 ml
Dimension	60x60x195

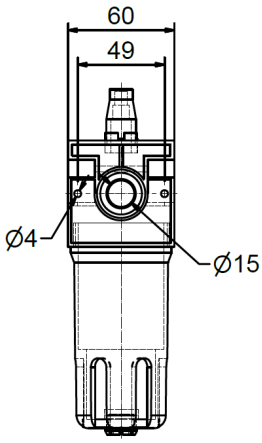

Ordering Information

Ordering Information	Weight KG
2813 9200 22	0,819

FRL MO-1/2"f

- **Regular oil flow for efficient supply to tools**
- **Proportional adjustment of the oil supply to the air flow rate for optimal lubrication possible, even at low pressures and low air flow rates**
- **Oil purification downstream of the filter pressure reducer**

- Working pressure range : 0-12 Bar
- Entry pressure: 0-18 bar
- Sight glass for oil

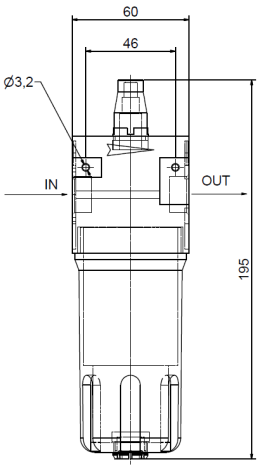

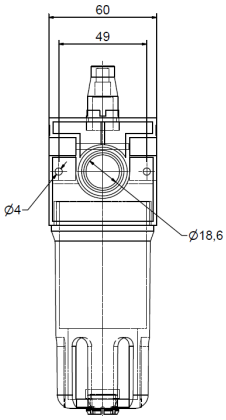

Specifications

Inlet Connection	1/2“ Female BSP thread
Outlet Connection	1/2“ Female BSP thread
Manometer Connection	1/2“ Female BSP thread
Flow rate	4.300 l/min
Oil tank volume	150 ml
Dimension	60x60x195

Ordering Information

Ordering Information	Weight KG
2813 9200 23	0,8

FRL MO-3/4"f

- **Regular oil flow for efficient supply to tools**
- **Proportional adjustment of the oil supply to the air flow rate for optimal lubrication possible, even at low pressures and low air flow rates**
- **Oil purification downstream of the filter pressure reducer**

- Working pressure range : 0-12 Bar
- Entry pressure: 0-18 bar
- Sight glass for oil

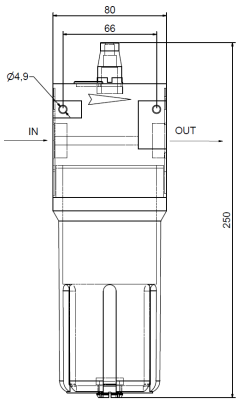

Specifications

Inlet Connection	3/4“ Female BSP thread
Outlet Connection	3/4“ Female BSP thread
Manometer Connection	3/4“ Female BSP thread
Flow rate	16.000 l/min
Oil tank volume	380 ml
Dimension	80x80x260

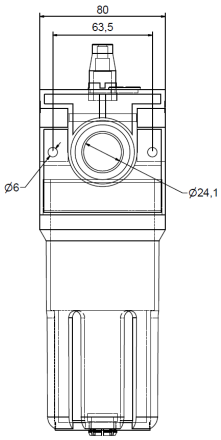

Ordering Information

Ordering Information	Weight KG
2813 9200 24	1,223

FRL MO-3/4"f NPT

- **Regular oil flow for efficient supply to tools**
- **Proportional adjustment of the oil supply to the air flow rate for optimal lubrication possible, even at low pressures and low air flow rates**
- **Oil purification downstream of the filter pressure reducer**

- Entry pressure: 0-18 bar
- Sight glass for oil

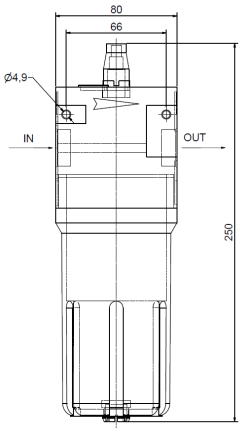

Specifications

Inlet Connection	3/4“ Female NPT thread
Outlet Connection	3/4“ Female NPT thread
Manometer Connection	3/4“ Female NPT thread
Flow rate	16.000 l/min
Oil tank volume	380 ml
Dimension	80x80x260

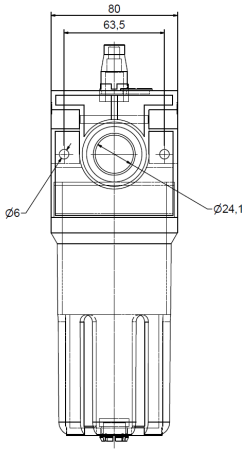

Ordering Information

Ordering Information	Weight KG
2813 9200 45	1,223

FRL MO-1"f

- **Regular oil flow for efficient supply to tools**
- **Proportional adjustment of the oil supply to the air flow rate for optimal lubrication possible, even at low pressures and low air flow rates**
- **Oil purification downstream of the filter pressure reducer**

- Working pressure range : 0-12 Bar
- Entry pressure: 0-18 bar
- Sight glass for oil

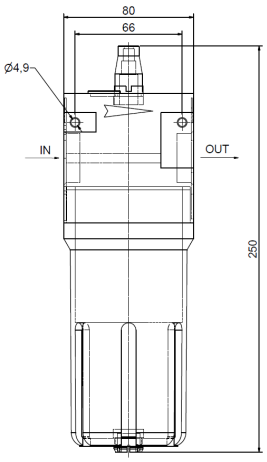

Specifications

Inlet Connection	1“ Female BSP thread
Outlet Connection	1“ Female BSP thread
Manometer Connection	1“ Female BSP thread
Flow rate	16.000 l/min
Oil tank volume	380 ml
Dimension	80x80x260

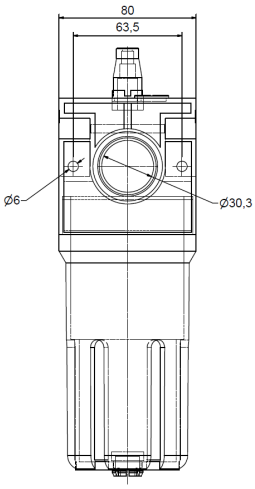

Ordering Information

Ordering Information	Weight KG
2813 9200 25	1,126

FRL MO-1"f NPT

- **Regular oil flow for efficient supply to tools**
- **Proportional adjustment of the oil supply to the air flow rate for optimal lubrication possible, even at low pressures and low air flow rates**
- **Oil purification downstream of the filter pressure reducer**

- Entry pressure: 0-18 bar
- Sight glass for oil

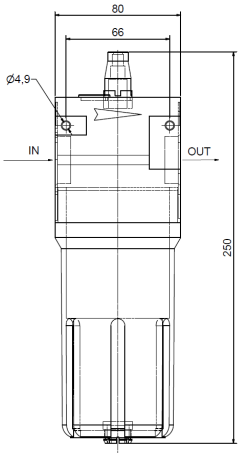

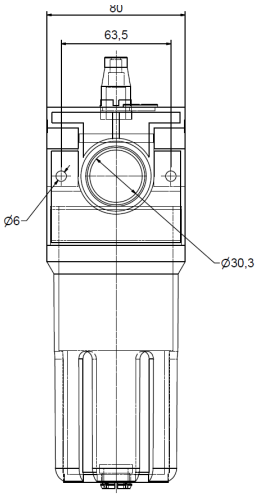

Specifications

Inlet Connection	1“ Female NPT thread
Outlet Connection	1“ Female NPT thread
Manometer Connection	1“ Female NPT thread
Flow rate	16.000 l/min
Oil tank volume	380 ml
Dimension	80x80x260

Ordering Information

Ordering Information	Weight KG
2813 9200 46	1,126

FRL FPR-MO 1/4"f

- **Fully fitted maintenance system consisting of filter pressure reducer and mist oiler (2-way filter unit) or filter water separator, pressure reducer and mist oiler (3-way filter unit) ready for immediate operation**
- **Pressure regulator with piston for high operational reliability**

- Working pressure range : 0-12 Bar
- Entry pressure: 0-18 bar
- Filter element: 20 µm
- With lockable adjustment button

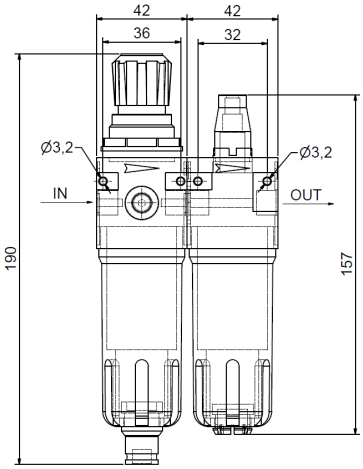

Specifications

Inlet Connection	¼“ Female BSP thread
Outlet Connection	¼“ Female BSP thread
Manometer Connection	¼“ Female BSP thread
Flow rate	500 l/min
Condensate tank volume	10 ml
Oil tank volume	50 ml
Dimension	84x42x190

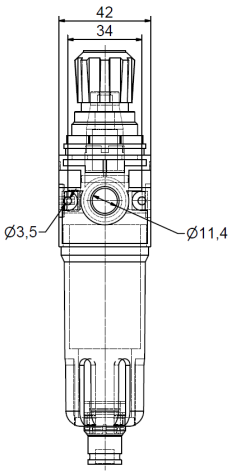

Ordering Information

Ordering Information	Weight KG
2813 9200 26	0,716

FRL FPR-MO 1/4"f NPT

- **Fully fitted maintenance system consisting of filter pressure reducer and mist oiler (2-way filter unit) or filter water separator, pressure reducer and mist oiler (3-way filter unit) ready for immediate operation**
- **Pressure regulator with piston for high operational reliability**

- Working pressure range : 0-12 Bar
- Entry pressure: 0-18 bar
- Filter element: 20 µm
- With lockable adjustment button

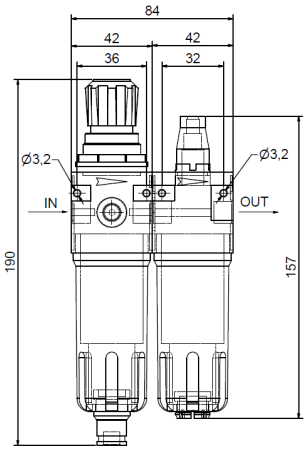

Specifications

Inlet Connection	¼“ Female NPT thread
Outlet Connection	¼“ Female NPT thread
Manometer Connection	¼“ Female NPT thread
Flow rate	500 l/min
Condensate tank volume	10 ml
Oil tank volume	50 ml
Dimension	84x42x190

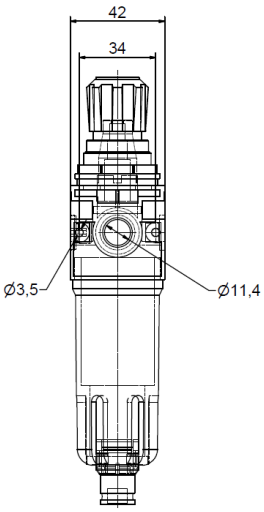

Ordering Information

Ordering Information	Weight KG
2813 9200 47	0,716

FRL FPR-MO 3/8"f

- **Fully fitted maintenance system consisting of filter pressure reducer and mist oiler (2-way filter unit) or filter water separator, pressure reducer and mist oiler (3-way filter unit) ready for immediate operation**
- **Pressure regulator with piston for high operational reliability**

- Working pressure range : 0-12 Bar
- Entry pressure: 0-18 bar
- Filter element: 20 µm
- With lockable adjustment button

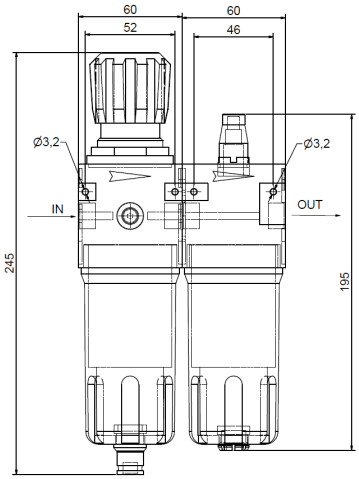

Specifications

Inlet Connection	3/8“ Female BSP thread
Outlet Connection	3/8“ Female BSP thread
Manometer Connection	3/8“ Female BSP thread
Flow rate	2.200 l/min
Condensate tank volume	45 ml
Oil tank volume	150 ml
Dimension	120x60x245

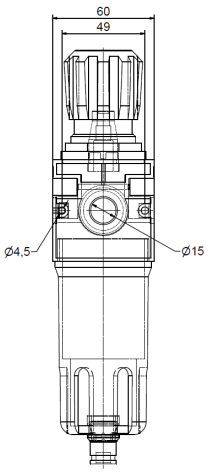

Ordering Information

Ordering Information	Weight KG
2813 9200 27	1,434

FRL FPR-MO 3/8"f NPT

- **Fully fitted maintenance system consisting of filter pressure reducer and mist oiler (2-way filter unit) or filter water separator, pressure reducer and mist oiler (3-way filter unit) ready for immediate operation**
- **Pressure regulator with piston for high operational reliability**

- Working pressure range : 0-12 Bar
- Entry pressure: 0-18 bar
- Filter element: 20 µm
- With lockable adjustment button

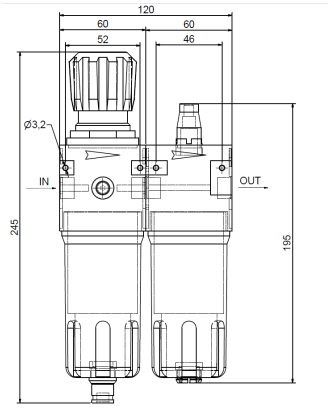

Specifications

Inlet Connection	3/8“ Female NPT thread
Outlet Connection	3/8“ Female NPT thread
Manometer Connection	3/8“ Female NPT thread
Flow rate	2.200 l/min
Condensate tank volume	45 ml
Oil tank volume	150 ml
Dimension	120x60x245

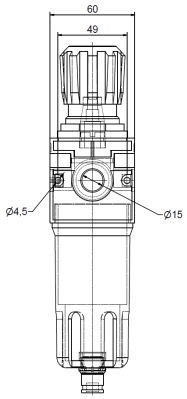

Ordering Information

Ordering Information	Weight KG
2813 9200 48	1,434

FRL FPR-MO 1/2"f

- **Fully fitted maintenance system consisting of filter pressure reducer and mist oiler (2-way filter unit) or filter water separator, pressure reducer and mist oiler (3-way filter unit) ready for immediate operation**
- **Pressure regulator with piston for high operational reliability**

- Working pressure range : 0-12 Bar
- Entry pressure: 0-18 bar
- Filter element: 20 µm
- With lockable adjustment button

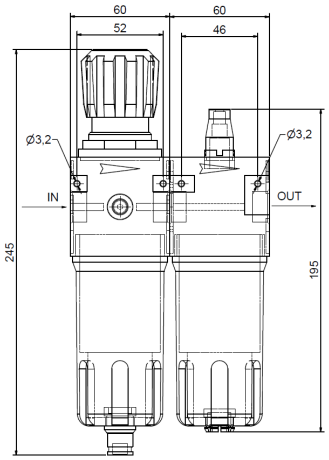

Specifications

Inlet Connection	1/2“ Female BSP thread
Outlet Connection	1/2“ Female BSP thread
Manometer Connection	1/2“ Female BSP thread
Flow rate	2.200 l/min
Condensate tank volume	45 ml
Oil tank volume	150 ml
Dimension	120x60x245

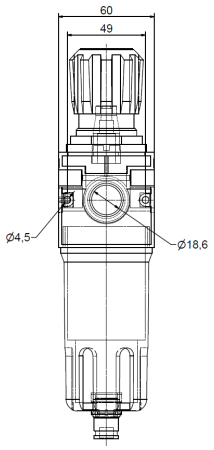

Ordering Information

Ordering Information	Weight KG
2813 9200 28	1,412

FRL FPR-MO 1/2"f NPT

- **Fully fitted maintenance system consisting of filter pressure reducer and mist oiler (2-way filter unit) or filter water separator, pressure reducer and mist oiler (3-way filter unit) ready for immediate operation**
- **Pressure regulator with piston for high operational reliability**

- Working pressure range : 0-12 Bar
- Entry pressure: 0-18 bar
- Filter element: 20 µm
- With lockable adjustment button

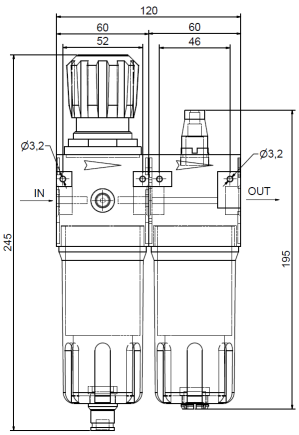

Specifications

Inlet Connection	1/2“ Female NPT thread
Outlet Connection	1/2“ Female NPT thread
Manometer Connection	1/2“ Female NPT thread
Flow rate	2.200 l/min
Condensate tank volume	45 ml
Oil tank volume	150 ml
Dimension	120x60x245

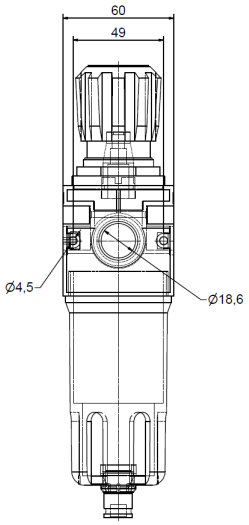

Ordering Information

Ordering Information	Weight KG
2813 9200 48	1,412

FRL FPR-MO 3/4"f

- **Fully fitted maintenance system consisting of filter pressure reducer and mist oiler (2-way filter unit) or filter water separator, pressure reducer and mist oiler (3-way filter unit) ready for immediate operation**
- **Pressure regulator with piston for high operational reliability**

- Working pressure range : 0-12 Bar
- Entry pressure: 0-18 bar
- Filter element: 20 µm
- With lockable adjustment button

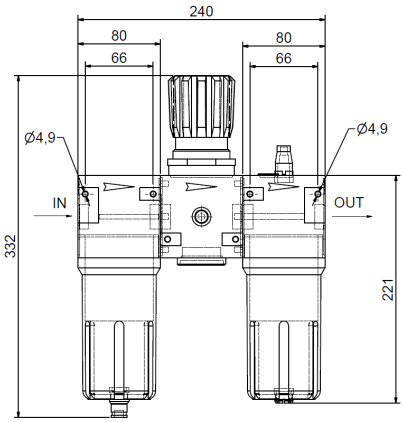

Specifications

Inlet Connection	3/4“ Female BSP thread
Outlet Connection	3/4“ Female BSP thread
Manometer Connection	3/4“ Female BSP thread
Flow rate	3.600 l/min
Condensate tank volume	170 ml
Oil tank volume	380 ml
Dimension	240x80x332

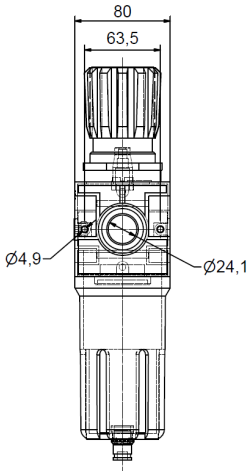

Ordering Information

Ordering Information	Weight KG
2813 9200 29	2,493

FRL FPR-MO 3/4"f NPT

- **Fully fitted maintenance system consisting of filter pressure reducer and mist oiler (2-way filter unit) or filter water separator, pressure reducer and mist oiler (3-way filter unit) ready for immediate operation**
- **Pressure regulator with piston for high operational reliability**

- Working pressure range : 0-12 Bar
- Entry pressure: 0-18 bar
- Filter element: 20 µm
- With lockable adjustment button

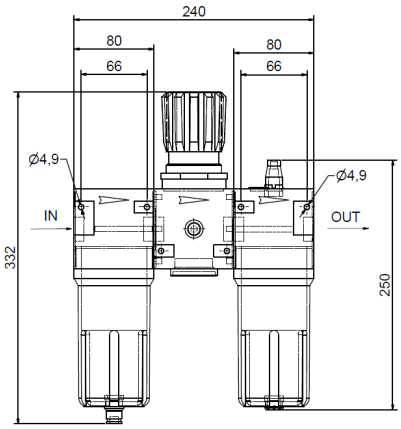

Specifications

Inlet Connection	3/4“ Female NPT thread
Outlet Connection	3/4“ Female NPT thread
Manometer Connection	3/4“ Female NPT thread
Flow rate	3.600 l/min
Condensate tank volume	170 ml
Oil tank volume	380 ml
Dimension	240x80x332

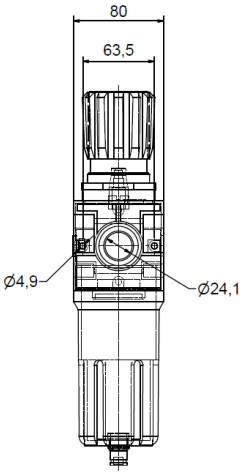

Ordering Information

Ordering Information	Weight KG
2813 9200 30	2,493

FRL FPR-MO 1"f

- **Fully fitted maintenance system consisting of filter pressure reducer and mist oiler (2-way filter unit) or filter water separator, pressure reducer and mist oiler (3-way filter unit) ready for immediate operation**
- **Pressure regulator with piston for high operational reliability**

- Working pressure range : 0-12 Bar
- Entry pressure: 0-18 bar
- Filter element: 20 µm
- With lockable adjustment button

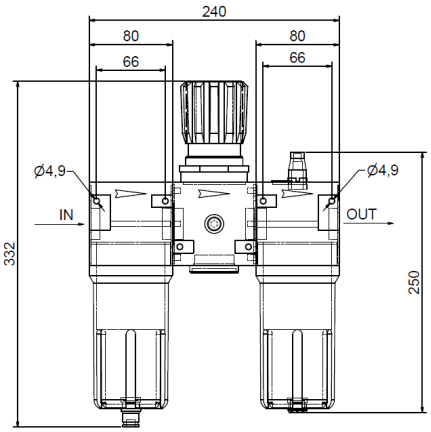

Specifications

Inlet Connection	1“ Female BSP thread
Outlet Connection	1“ Female BSP thread
Manometer Connection	1“ Female BSP thread
Flow rate	3.700 l/min
Condensate tank volume	170 ml
Oil tank volume	380 ml
Dimension	240x80x332

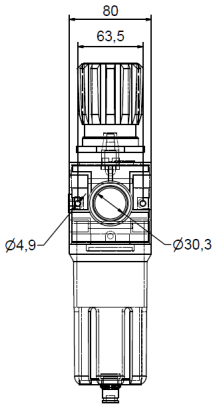

Ordering Information

Ordering Information	Weight KG
2813 9200 31	2,340

FRL FPR-MO 1"f NPT

- **Fully fitted maintenance system consisting of filter pressure reducer and mist oiler (2-way filter unit) or filter water separator, pressure reducer and mist oiler (3-way filter unit) ready for immediate operation**
- **Pressure regulator with piston for high operational reliability**

- Working pressure range : 0-12 Bar
- Entry pressure: 0-18 bar
- Filter element: 20 µm
- With lockable adjustment button

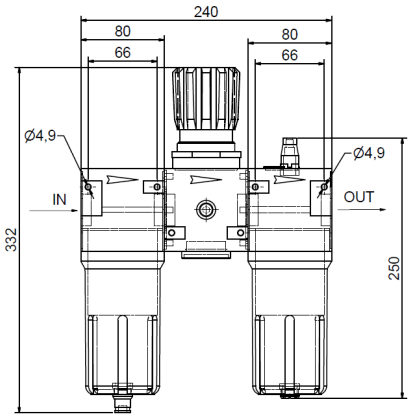

Specifications

Inlet Connection	1“ Female NPT thread
Outlet Connection	1“ Female NPT thread
Manometer Connection	1“ Female NPT thread
Flow rate	3.700 l/min
Condensate tank volume	170 ml
Oil tank volume	380 ml
Dimension	240x80x332

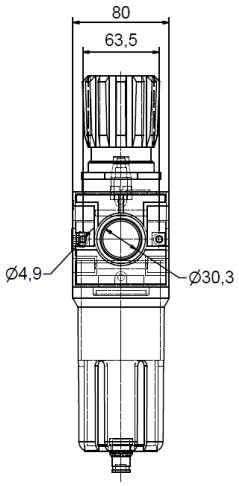

Ordering Information

Ordering Information	Weight KG
2813 9200 32	2,340

www.airnet-system.com

We do not accept any liability for errors, printing errors or any changes made to the technical specifications..

FAST EASY RELIABLE